Willamette Water Supply
Our Reliable Water

Practical Applications for Transient Ground Shaking in the Design of Earthquake Resistant Welded Steel and Ductile Iron Pipelines

AWWA PNWS Conference - April 29, 2022

Michael Britch, P.E., MPA
Engineering and Construction Manager
Willamette Water Supply Program

American Water Works Association
Pacific Northwest Section

Outline

- Willamette Water Supply Program Background
- Earthquake Shaking Intensity
- Seismic Waves Background
- Transient Ground Shaking Background
- Fault Orientation Significance
- Transient Ground Shaking Evaluation
- Concluding Remarks

Willamette Water Supply Program

***Mission Statement: Provide a cost-effective, reliable and resilient water supply system** by July 2026, that benefits current and future generations of the communities we serve and supports a vibrant local economy.*

Image from the Regional Water Providers Consortium

It's important to think about this as a "system" when considering seismic resilience

Willamette Water Supply
Our Reliable Water

Earthquake Shaking Intensity

USGS

Transform Plate Boundary

Earthquake Shaking Intensity

San Francisco City Hall after the 1906 Earthquake

This photograph by Arnold Genthe shows Sacramento Street and approaching fire

Seismic Wave Propagation. The plates remain in motion while at their edges they become stuck. As the plates keep moving strain energy builds up as the rock deforms elastically near a fault. When the amount of stored energy in the rock near the fault exceeds its strength, the plates slip past each other creating an earthquake. This *elastic rebound theory of earthquakes* was established by H.F. Reid, professor of geology at John Hopkins University, after the 1906 San Francisco Earthquake by comparing two nineteenth-century land surveys on both sides of the fault with a new survey taken just after the earthquake (Yeats, 2004).

Reid estimated the work done by the elastic stresses associated with the 1906 San Francisco Earthquake to be 1.3 x 10^{17} foot-pounds (130 quadrillion foot-pounds).

Source: USGS https://earthquake.usgs.gov/earthquakes/events/1906calif/18april/

Earthquake Shaking Intensity

Convergent Plate Boundary

2011 Tohoku Subduction Zone Earthquake

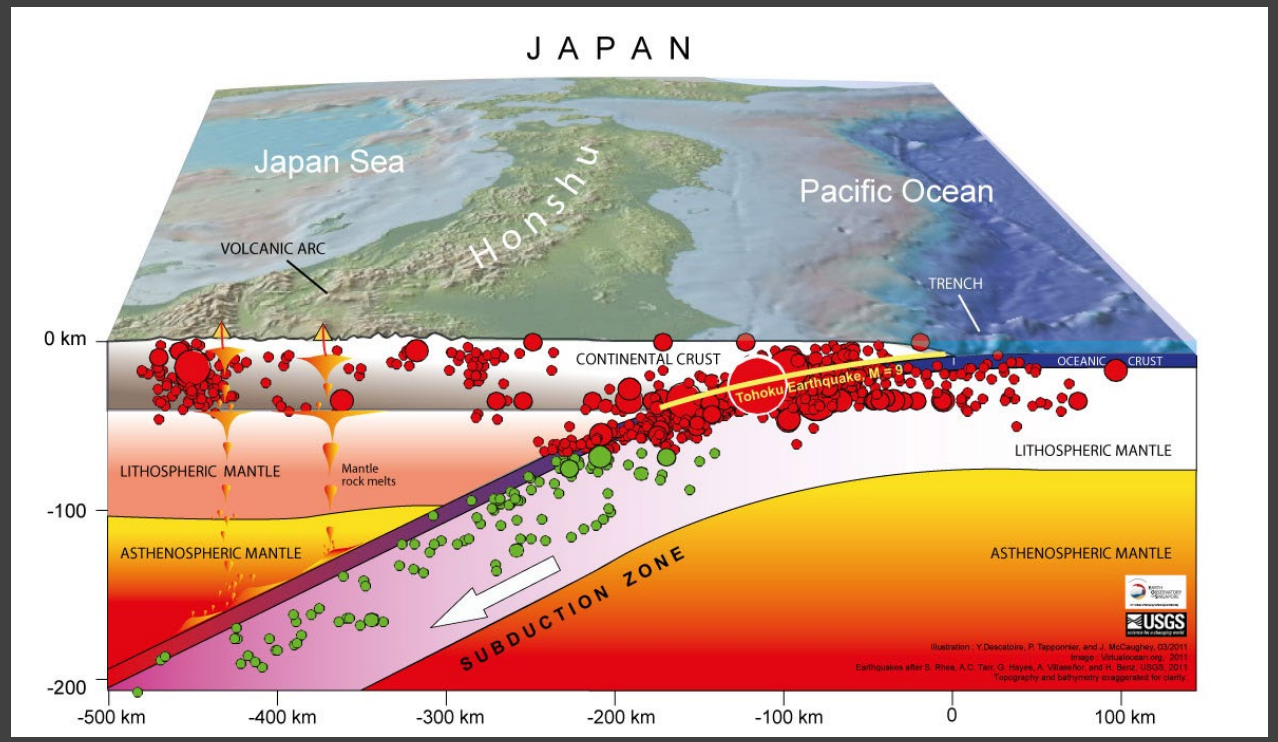

Source: https://www.earthobservatory.sg/

"Experts calculate the fault—or the boundary between two tectonic plates— in the Japan trench slipped by as much as 164 feet (50 meters). Other similarly large magnitude earthquakes, including the 9.1 Sumatra event in 2004, resulted in a 66-to-82 foot (20-to-25 meter) slip in the fault. "We've never seen 50-meter [slips]," said Kelin Wang, a geophysicist with the Geological Survey of Canada in British Columbia. The next largest slip would probably be the Chile earthquake in 1960, said Wang, who was not involved in the research. Based on the limited data recorded from that earthquake, the fault slipped by 98 to 131 feet (30 to 40 meters)."

Source: National Geographic, *"The 2011 Japan Tsunami Was Caused By Largest Fault Slip Ever Recorded"*

Seismic Waves

Energy release along fault

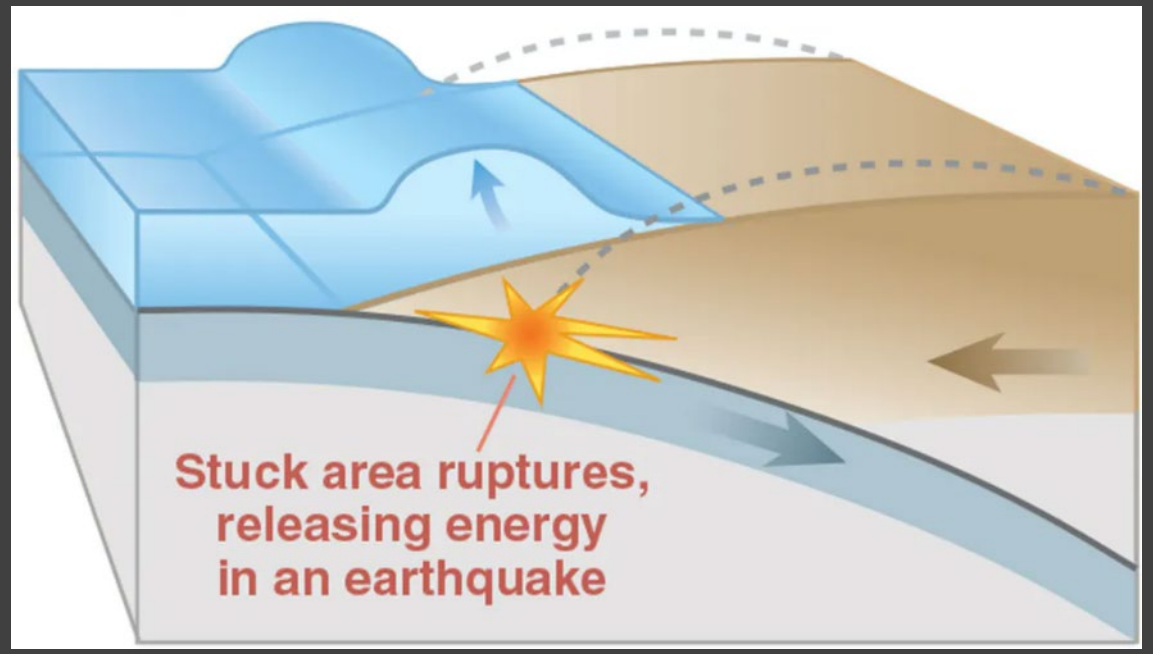

When the built-up elastic strain energy is released during fault rupture, seismic waves propagate away from the fault rupture in all directions. The energy carried away from the fault rupture through the ground is done so by seismic waves called *body waves*. There are two types of body waves, primary or P-waves and secondary or S-waves. P-waves are compressional waves in which the particle motion is parallel to direction the wave is traveling where the ground alternatively experiences compressional and tensile strain as the waves advance. With S-waves, the particle motion is transverse or perpendicular to the direction the wave is traveling creating shearing and bending. According the Kramer (1996), the "speed at which body waves travel varies with stiffness of the materials they travel through. Since geologic materials are stiffest in compression, p-waves travel faster than other seismic waves and are therefore the first to arrive at a particular site". P-waves travel at almost twice the speed of S-waves (PNSN, n.d.).

Seismic Waves

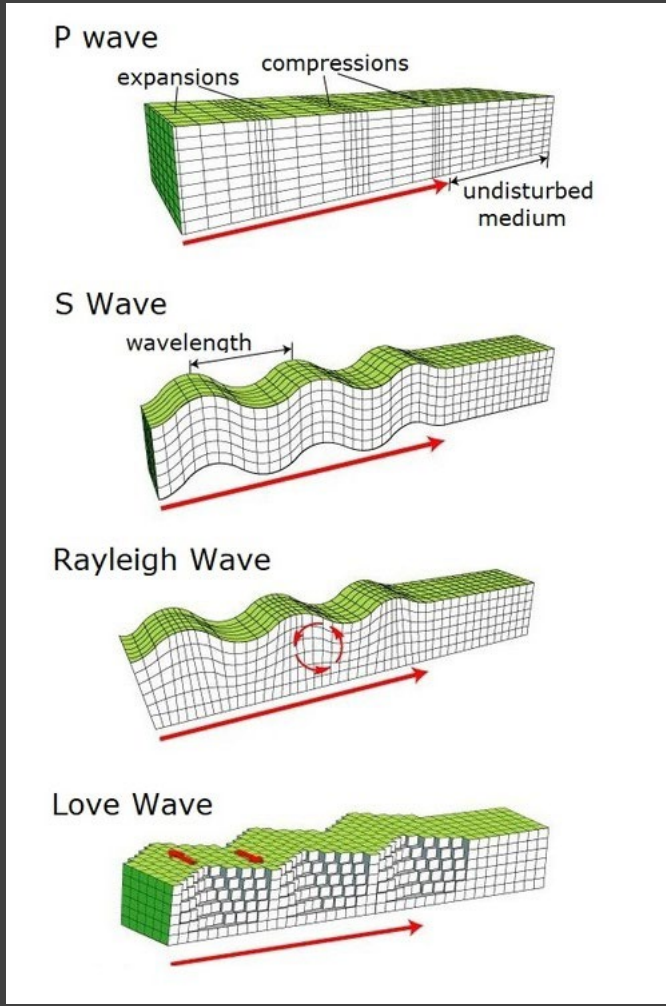

Source: https://www.sciencelearn.org

"…The most important of these waves causing strains potentially damaging to buried pipes are S-waves and R-waves…. S-waves carry large energy potential …. The R-wave motions can generate large axial strains…"

(Source: "Strain Demands on Buried Pipelines from Earthquake-Induced Ground Movements", Davis et al., 2019)

Seismic Waves

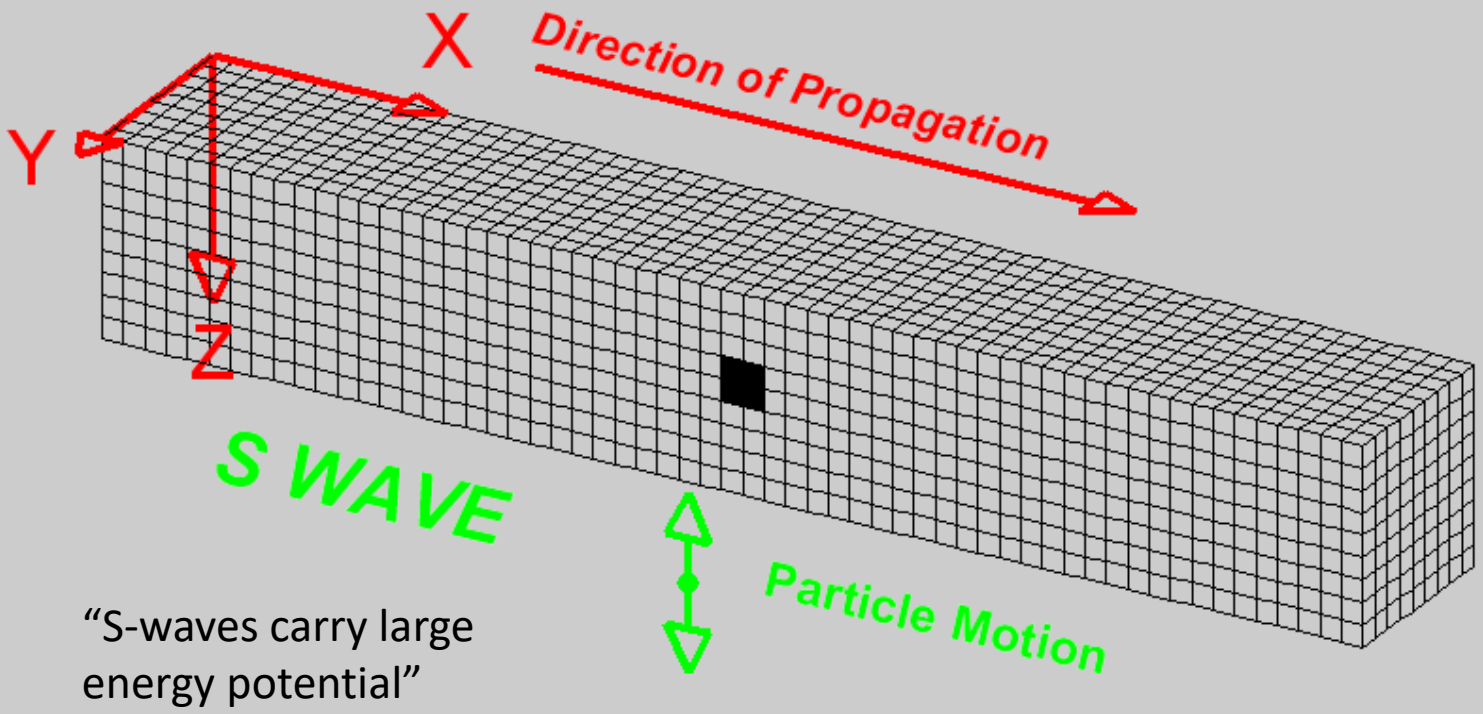

"S-waves carry large energy potential"

Shear Wave (Body Wave) Particle Movement [S-wave]

Source: [All About Earthquakes | Alberta Geological Survey (aer.ca)]

Seismic Waves

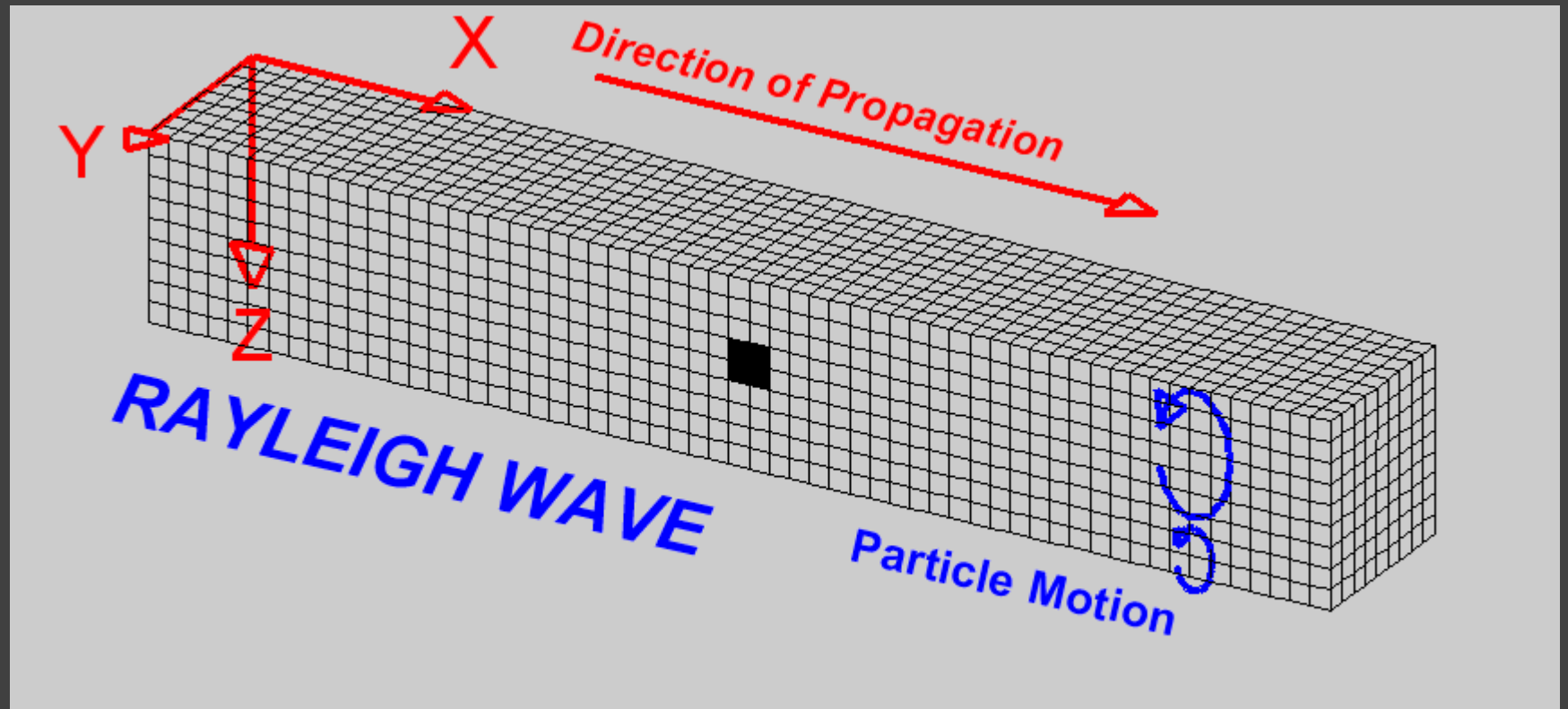

Rayleigh Wave (Surface Wave) Particle Movement [R-wave]

Source: All About Earthquakes | Alberta Geological Survey (aer.ca)

"Surface waves are generated by shallow fault rupture and reflection and refraction of body waves at the ground surface. R-waves are a combination of compression and shear waves where the particle motion traces a retrograde ellipse in a vertical plane with the horizontal component of motion being parallel to the direction of wave movement… The R-wave motions can generate large axial strains"

(Source: "Strain Demands on Buried Pipelines from Earthquake-Induced Ground Movements", Davis et al., 2019)

Establish Design Earthquake

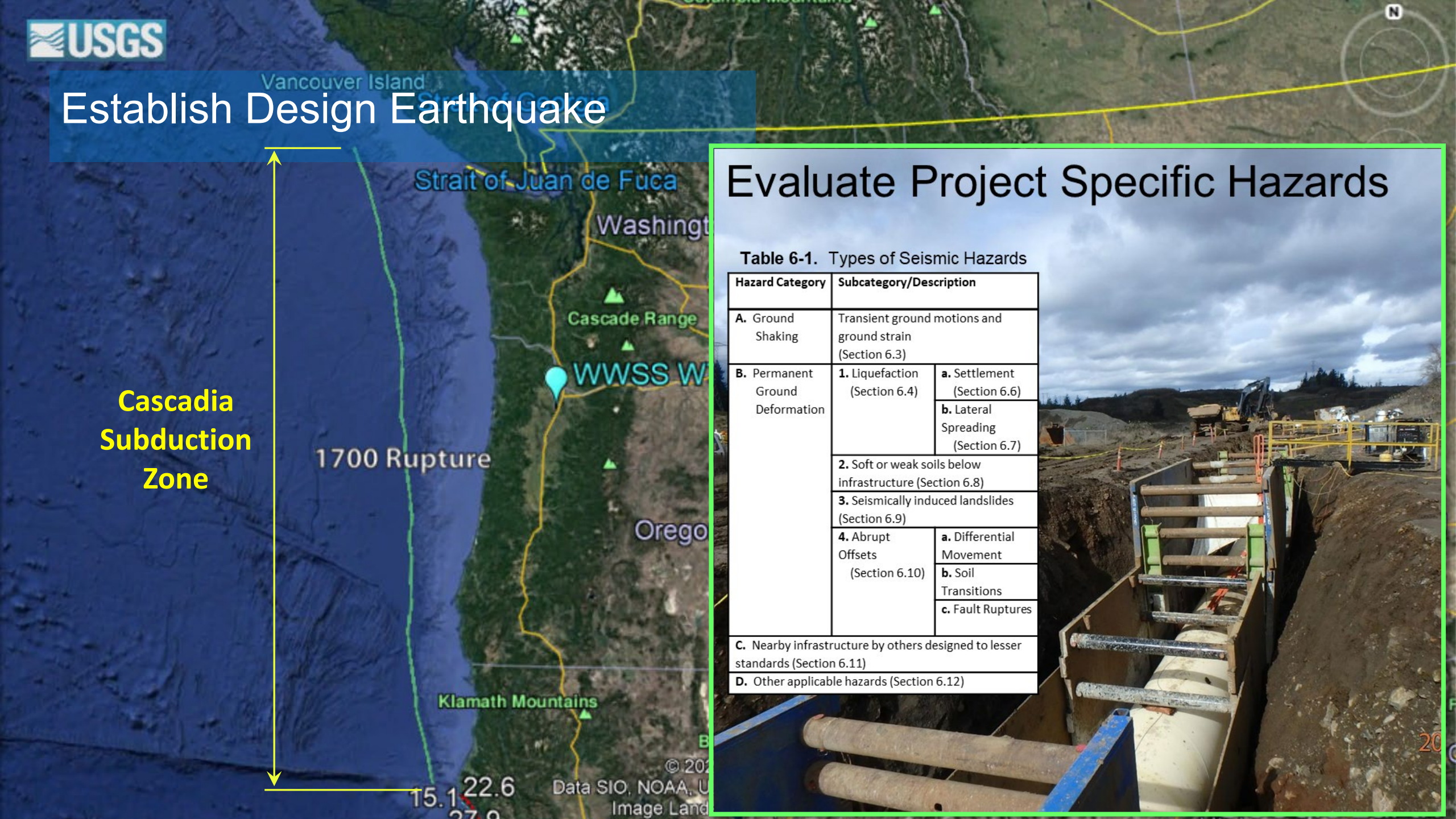

Cascadia Subduction Zone

Evaluate Project Specific Hazards

Table 6-1. Types of Seismic Hazards

Hazard Category	Subcategory/Description	
A. Ground Shaking	Transient ground motions and ground strain (Section 6.3)	
B. Permanent Ground Deformation	**1.** Liquefaction (Section 6.4)	**a.** Settlement (Section 6.6)
		b. Lateral Spreading (Section 6.7)
	2. Soft or weak soils below infrastructure (Section 6.8)	
	3. Seismically induced landslides (Section 6.9)	
	4. Abrupt Offsets (Section 6.10)	**a.** Differential Movement
		b. Soil Transitions
		c. Fault Ruptures
C. Nearby infrastructure by others designed to lesser standards (Section 6.11)		
D. Other applicable hazards (Section 6.12)		

Transient Ground Shaking

O'Rourke and Liu (2012) state:

"The wave propagation hazard occurs in every event and generally leads to low to moderate damage rates for buried pipe…[I]t is unusual when [continuous pipelines] are damaged by the wave propagation hazard."

ALA (2005) states:

- "there is strong evidence that wave propagation (PGV) loading without concurrent (PGD) loading causes just limited or modest damage to buried water pipe networks."
- "pipelines located within 15 km of the seismic source can be subjected to near-source seismic shaking, resulting in significantly larger ground motion parameters and ground strain that pipes located further away from the source."

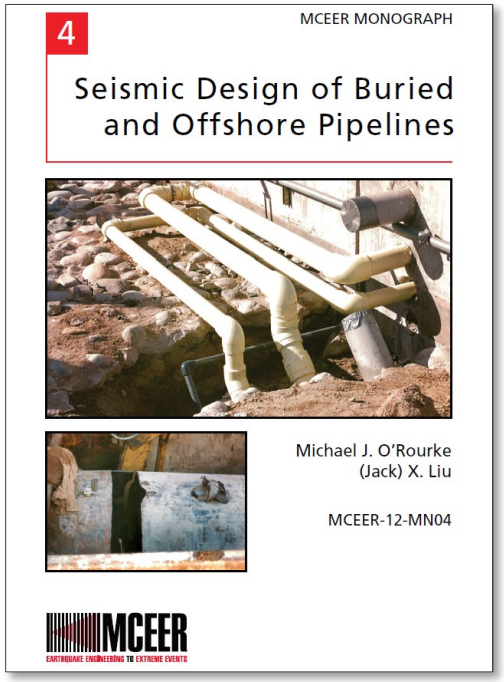

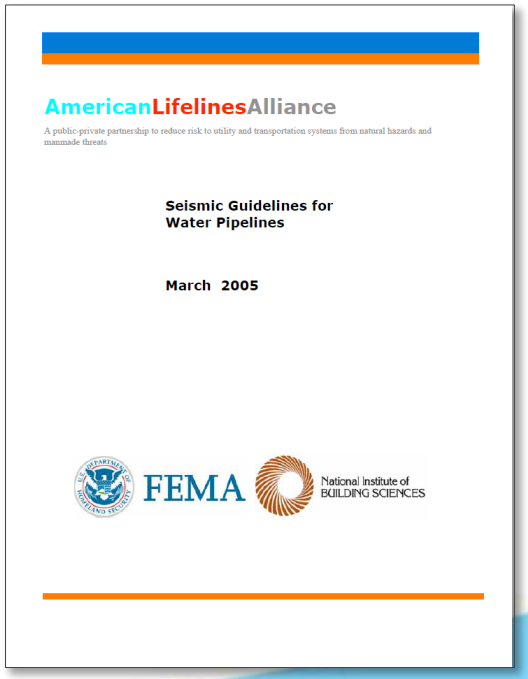

Transient Ground Shaking

"Many times ground shaking is not the cause of pipeline failure"

Ground Shaking. *Ground shaking represents transient ground motions that are propagated through the ground due to the seismic fault movement. This hazard includes loading on the infrastructure that only exists while the ground shaking is ongoing. Once the ground shaking stops, the transient loading imposed on the infrastructure subsides.*

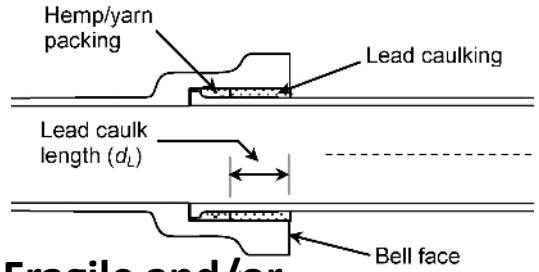

Fragile and/or Unrestrained Pipe Joints

- Examples resulting in failure

Figure 4.2 Tear at Wrinkle in Ciudad Nezahualcoyotl Pipeline (Mexico City, 1985)

Local Site Effects. ***1)*** Circumferential tear in pipe wall (load reversal). [Mexico City (1985) M 8.0 > 200 miles away], ***2)*** Broken utility lines [Marina District, Loma Pieta Earthquake (1989) M 6.9]

Photo by AP Photo/George Nikitin

Near Field Source (< 15 km). Gas from a ruptured supply line burns with flooding from broken water main [Northridge Earthquake (1994) M 6.7] ***[Primary damage by PGD]***

Photo by AP Photo/Lenny Ignelzi

Transient Ground Shaking Equations

- Newmark (1967) original strain equations:

$$\varepsilon_m = -\frac{v_m}{c}$$

where:

ε_m = the maximum strain at a point
v_m = the maximum velocity at a point
c = the velocity of wave propagation

- Wave orientation incidence angle to pipeline from O'Rourke (1996):

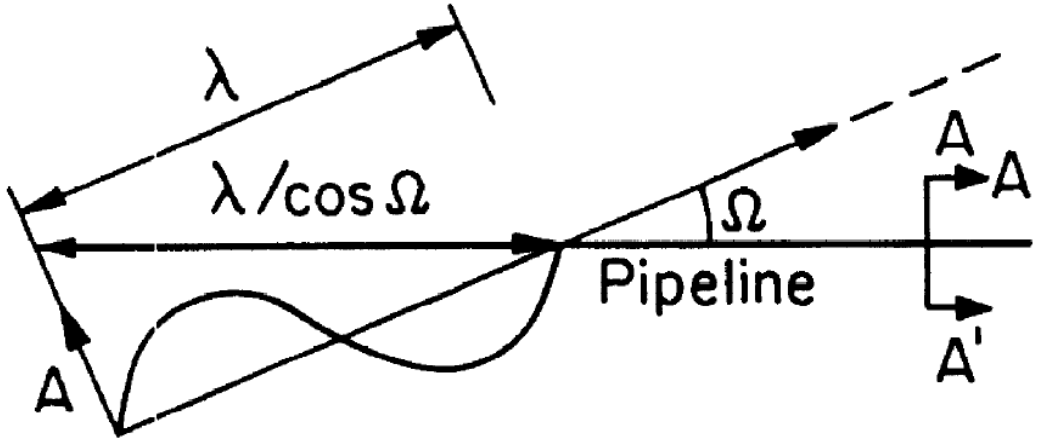

a) Wave Orientation

Transient Ground Shaking Equations (axial strains)

Body Waves

From Yeh (1974) for shear waves:

$$\varepsilon = \pm \frac{v_{s\theta}}{c_s} \sin\theta \cos\theta$$

The maximum axial strain occurs when $\theta = 45^o$ and the equation becomes:

$$\varepsilon = \pm \frac{v_{s\theta}}{2c_s}$$

Surface Waves

From Yeh (1974) for Rayleigh waves:

$$\varepsilon = \pm \frac{v_{R\theta}}{c_R} cos^2\theta$$

The maximum axial strain occurs when $\theta = 0^o$. This results in the direction of wave propagation parallel to the pipeline and simplifies the equation to:

$$\varepsilon = \pm \frac{v_{R\theta}}{c_R}$$

Fault Orientation Significance

Energy release along fault

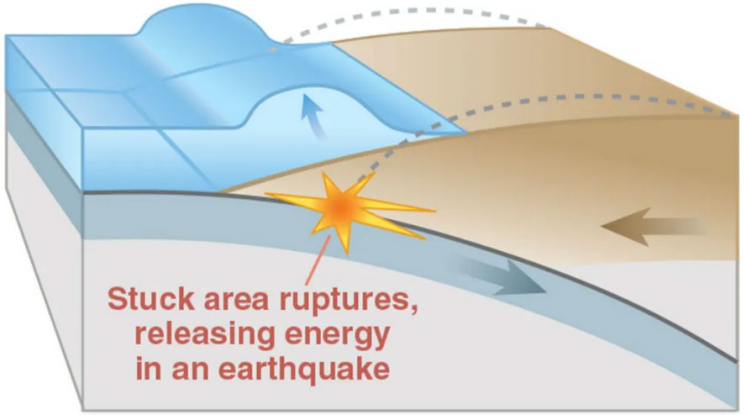

Underlying assumptions:

- Waves propagate away from the fault rupture in all directions
- Energy is greater closer to the fault rupture
- Body waves equally affect all WWSP pipelines
- Rayleigh waves have greatest influence on E-W pipelines and minimal influence on N-S pipelines

CSZ Fault Orientation Generally N-S

"Figure 3.2 shows the east-west ground velocity time histories in the hill and lake zones of Mexico City during the 1985 Michoacan earthquake…However, the peak ground velocity of 30 or 40 cm/sec occurs roughly a minute or two after initial triggering. This suggests that Rayleigh waves could well have been present in the lake zone record. Note that if R-waves are present, they arrive after the arrival of the direct body waves" (O'Rourke and Lui, 2012).

Fault Orientation Significance

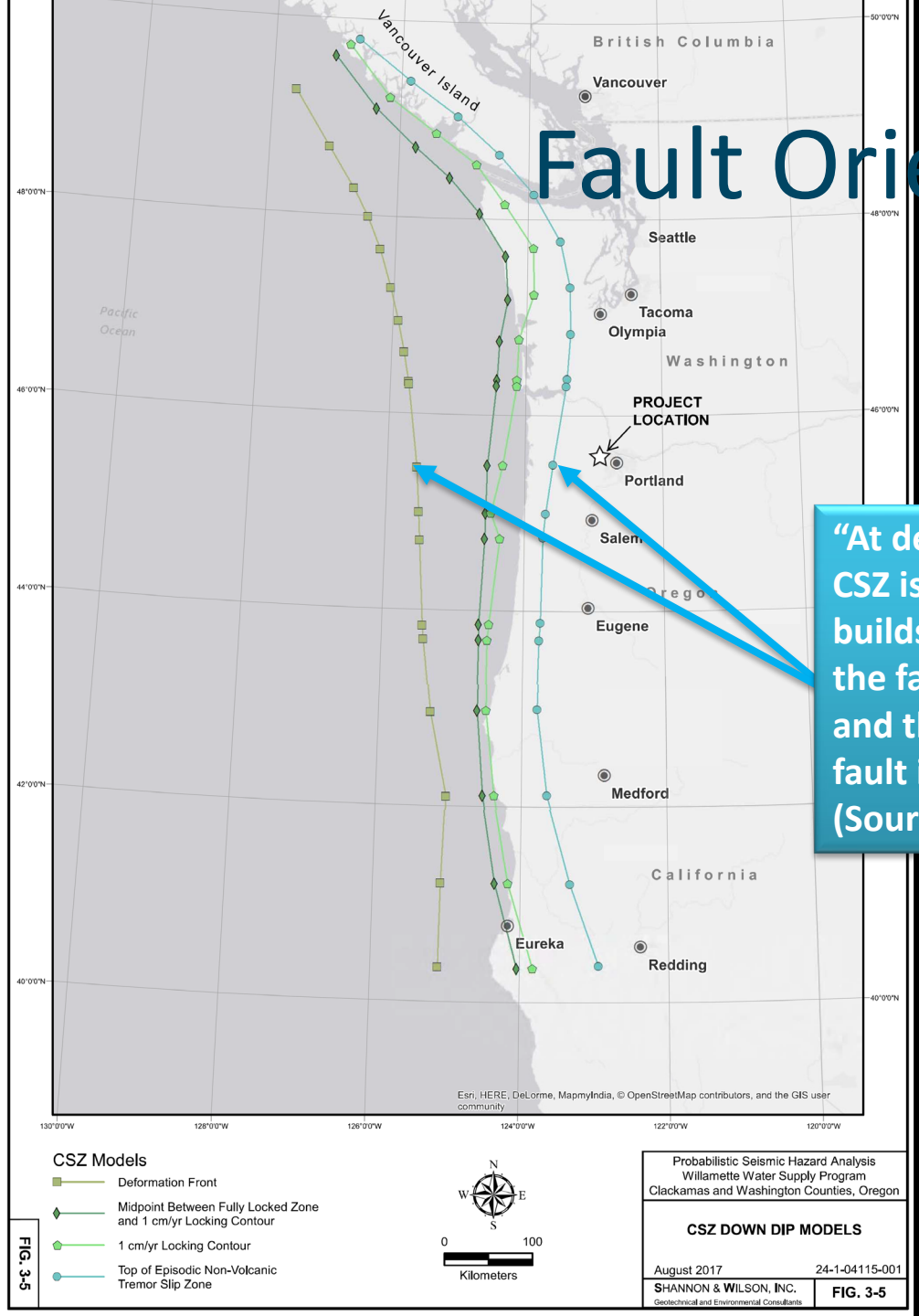

"At depths shallower than 30 km or so, the CSZ is locked by friction while strain slowly builds up as the subduction forces act, until the fault's frictional strength is exceeded and the rocks slip past each other along the fault in a 'megathrust' earthquake." (Source: PNSN.org)

"The Rayleigh waves produced by earthquakes were once thought to appear only at very large epicenter distances… now recognized… they can be significant at much shorter distances (a few tens of kilometers)" (Source: Kramer, 1996)

"the range muse be at least five times greater than the source… depths in order for the Rayleigh pulse to be developed" (Source: Aki and Richards, 2002)

"Attenuation behaves like $r^{-1/2}$ with distance as compared with body waves (~ r^{-1})… so that Rayleigh waves must dominate the ground motion at a sufficient range" (Source: Aki and Richards, 2002)

Transient Ground Shaking Evaluation

Conditions Conducive to Surface Wave (R-wave) Generation and Higher Axial Stresses

- Soft soils
- Deep sediments (depths > 30 ft)
- Bends (includes tees and isolation valves that are normally in closed position)
- Alignment in the E-W direction (within ± 30 degrees of line perpendicular to the fault direction)
- Double lap welds vs. butt welds for welded steel pipe (confirmed adequacy for Class 52 DIP)

Example with 30-inch diameter Class 52 ductile iron pipe

Example with 66-inch diameter with 3/8-inch wall welded steel pipe

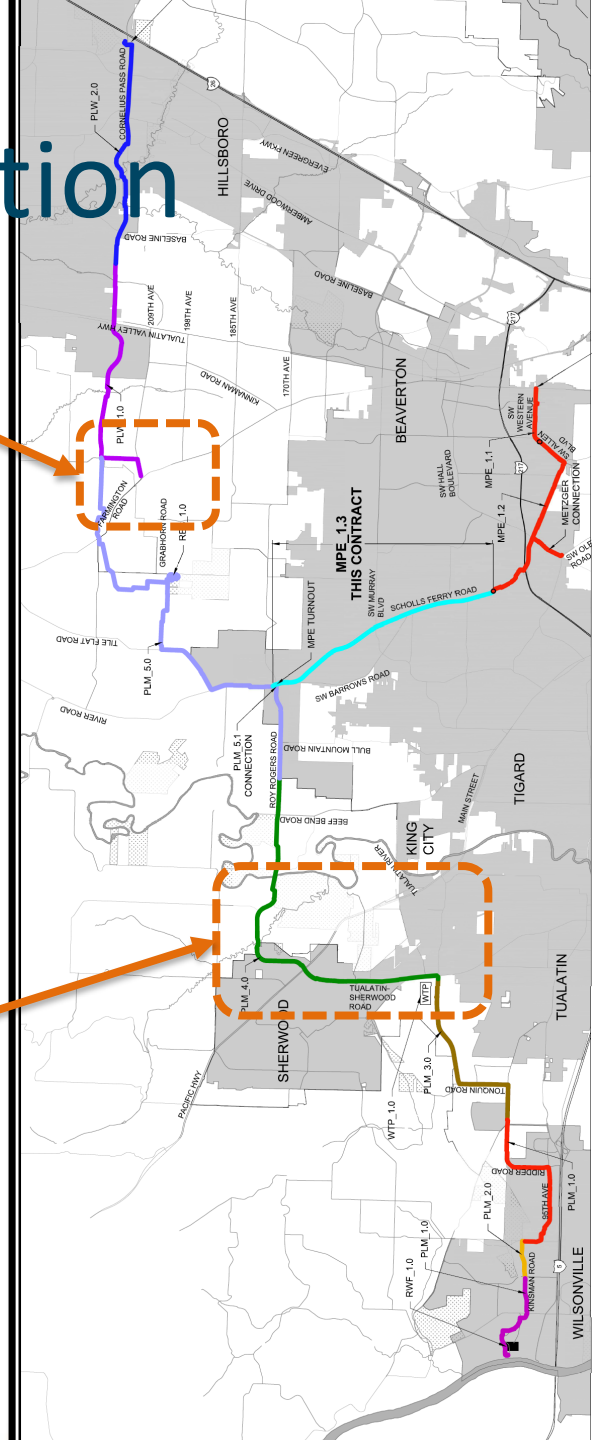

Transient Ground Shaking Evaluation

Step 1: Determine soil site class

Shear wave velocity values from cone penetrometer tests (CPTs)

n-values from standard penetration tests (SPTs)

Table 20.3-1 Site Classification

Site Class	$\bar{v}_s$	$\bar{N}$ or $\bar{N}_{ch}$	$\bar{s}_u$
A. Hard rock	>5,000 ft/s	NA	NA
B. Rock	2,500 to 5,000 ft/s	NA	NA
C. Very dense soil and soft rock	1,200 to 2,500 ft/s	>50 blows/ft	>2,000 lb/ft^2
D. Stiff soil	600 to 1,200 ft/s	15 to 50 blows/ft	1,000 to 2,000 lb/ft^2
E. Soft clay soil	<600 ft/s	<15 blows/ft	<1,000 lb/ft^2
	Any profile with more than 10 ft of soil that has the following characteristics: — Plasticity index $PI > 20$, — Moisture content $w \geq 40\%$, — Undrained shear strength $\bar{s}_u < 500$ lb/ft^2		
F. Soils requiring site response analysis in accordance with Section 21.1	See Section 20.3.1		

Note: For SI: 1 ft = 0.3048 m; 1 ft/s = 0.3048 m/s; 1 lb/ft^2 = 0.0479 kN/m^2.

(Source: ASCE 7-16)

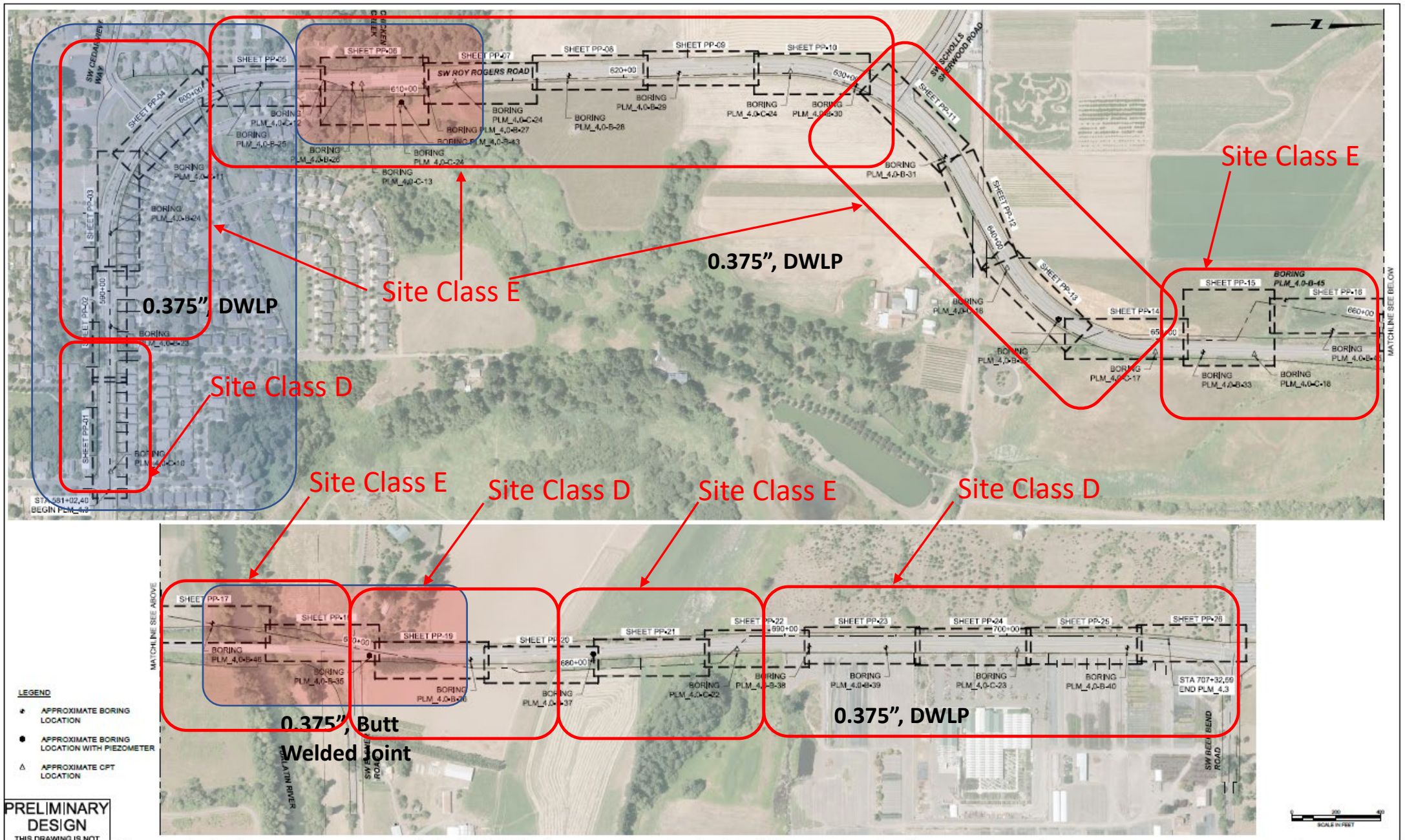

PRELIMINARY DESIGN

THIS DRAWING IS NOT VALID FOR CONSTRUCTION PURPOSES UNLESS IT BEARS THE SEAL AND SIGNATURE OF A DULY REGISTERED PROFESSIONAL

DSGN					
DR					
CHK					
APVD	NO.	DATE	REVISION	BY	APVD

VERIFY SCALE
BAR IS ONE INCH ON ORIGINAL DRAWING. 0 1"
IF NOT ONE INCH ON THIS SHEET, ADJUST SCALES ACCORDINGLY.

60% SUBMITTAL

Willamette Water Supply
Our Reliable Water
WILLAMETTE WATER SUPPLY PROGRAM

Brown AND Caldwell

GENERAL
PLAN AND PROFILE KEY MAP

SHEET	XX
DWG	G-04
DATE	
PROJ	PLM_4.3

FILENAME: XXXX-G-04.DWG PLOT DATE AND TIME: 11/27/2017 10:06:35 AM

Transient Ground Shaking Evaluation

Step 2: Calculate maximum internal pressure and associated Poisson's axial stress

WWSP PLM_4.3 Final Seismic QC Check (Restrained Length)

By: Mike Britch **Date: 12/16/2021**

[Based 100% Submittal, November 2021]

Internal Pressure

Max. HGL:	615	ft [Max. HGL w/ surge, near Chicken Creek, DWG G-11]
Min. I.E.:	102	ft [STA 682+28, DWG PP-15A (not including trenchless sections)]
Difference:	513	ft
Pressure:	222	psi
Hoop pressure:	19,536	psi
Axial (Poissons):	5,919	psi

Welded Steel Pipe

66	in diameter
0.375	in wall thickness
265	lbs/ft (not counting cement mortar lining)
1,748	lbs/ft with contents (not counting cement mortar lining

Transient Ground Shaking Evaluation

Step 3: Determine axial stress from thrust near bends

								90 Degree Bend Thrust			**45 Degree Bend Thrust**			**22.5 Degree Bend Thrust**		
									683,892	lbs	0.2926	200,115	lbs	0.0760	52,006	lbs
									8,800	psi		2,575	psi		669	psi
PLM_4.1								**65 Degree Bend Thrust**			**40 Degree Bend Thrust**			**11.25 Degree Bend Thrust**		
610	Max HGL		D=	5.5	ft			0.5769	394,510	lbs	0.2337	159,845	lbs	0.0192	13,128	lbs
150	Min GE	**t (in)**	tan sig	0.6					5,076	psi		2,057	psi		169	psi
460	Dif	3/8	A=	77.72	si						**30 Degree Bend Thrust**					
200	Pres. (psi)	7/16	A=	90.67	si						0.1338	91,533	lbs			
		1/2	A=	103.62	si							1,178	psi			

Transient Ground Shaking Evaluation

Step 4: Calculate ground strain as an axial stress on pipe

				Ground Strain Stress [Accleration Source: PSHA (Table 5-1. 2,475-Year Return Period Mean Uniform Hazard Spectra - Site A)]		
			1 Site Class:	E	DE [1]	D
			1 sec Period Spectral Acceleration (g):	1.166	0.996	0.825
			PGV (in/s):	43.48	37.14	76
				(psi)	(psi)	(psi)
				16,723	14,285	11,831

NIST, FEMA, NSF, USGS

New intermediate Site Class DE from NEHRP (2020) important

National Earthquake Hazards Reduction Program

WWSP PLM_4.2 Seismic Pipe Joint Evaluation

Table 1. Shear Wave Velocity Relative to Site Class

Site Class	Description	Shear Wave Velocity (feet/sec.)		
		NEHRP (2020)	PSHA (2017)	Weighted Average along PLM_4.0
A	Hard Rock	>5,000	-	-
B	Medium Hard Rock	3,000 – 5,000	-	-
BC	Soft Rock	2,100 – 3,000	2,500	-
C	Very Dense Sand or Hard Clay	1,450 – 2,100	1,750	-
CD	Dense Sand or Very Stiff Clay	1,000 – 1,450	1,200	-
D	Medium Dense Sand or Stiff Clay	700 – 1,000	850	496 – 854
DE	Loose Sand or Medium Stiff Clay	500 – 700	-	
E	Very Loose Sand or Soft Clay	<500	500	
F	Soils Requiring Site Response Analysis	-	-	-

Transient Ground Shaking Evaluation

Step 4: Calculate ground strain as an axial stress on pipe

				Ground Strain Stress [Accleration Source: PSHA (Table 5-1. 2,475-Year Return Period Mean Uniform Hazard Spectra - Site A)]		
			① Site Class:	E	DE [1]	D
②			1 sec Period Spectral Acceleration (g):	1.166	0.996	0.825
			PGV (in/s):	43.48	37.14	30.76
				(psi)	(psi)	(psi)
				16,723	14,285	11,831

Table 2. PSHA and Interpolated Spectral Accelerations

Seismic Parameter	PSHA Site Class		Interpolated
	Site Class D	Site Class E	Site Class DE
Peak Ground Acceleration (g)	0.565	0.543	0.554
0.2 sec Period Spectral Acceleration (g)	1.336	1.202	1.269
1.0 sec Period Spectral Acceleration (g)	0.825	1.166	0.996
Peak Ground Velocity (in./sec)	30.8	43.5	37.1

Acceleration values from Program's Probabilistic Seismic Hazard Analysis (PSHA) [Shannon & Wilson, 2017]

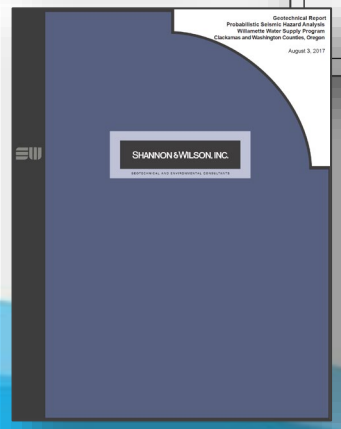

Transient Ground Shaking Evaluation

Step 4: Calculate ground strain as an axial stress on pipe

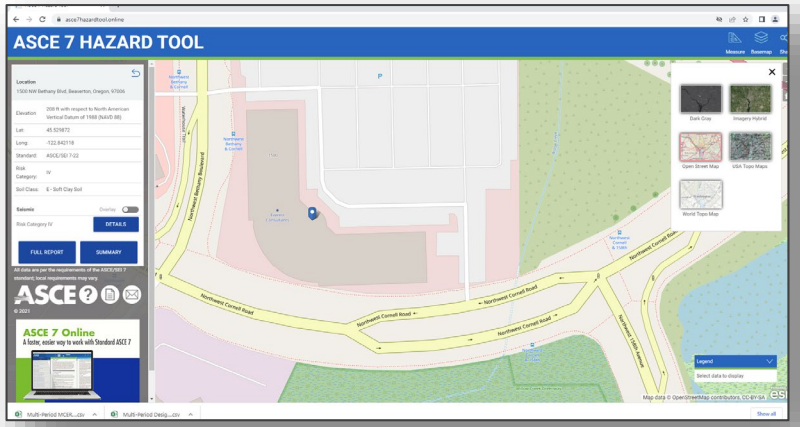

				Ground Strain Stress [Accleration Source: PSHA (Table 5-1. 2,475-Year Return Period Mean Uniform Hazard Spectra - Site A)]		
			① Site Class:	E	DE [1]	D
②			1 sec Period Spectral Acceleration (g):	1.166	0.996	0.825
			PGV (in/s):	43.48	37.14	30.76
				(psi)	(psi)	(psi)
				16,723	14,285	11,831

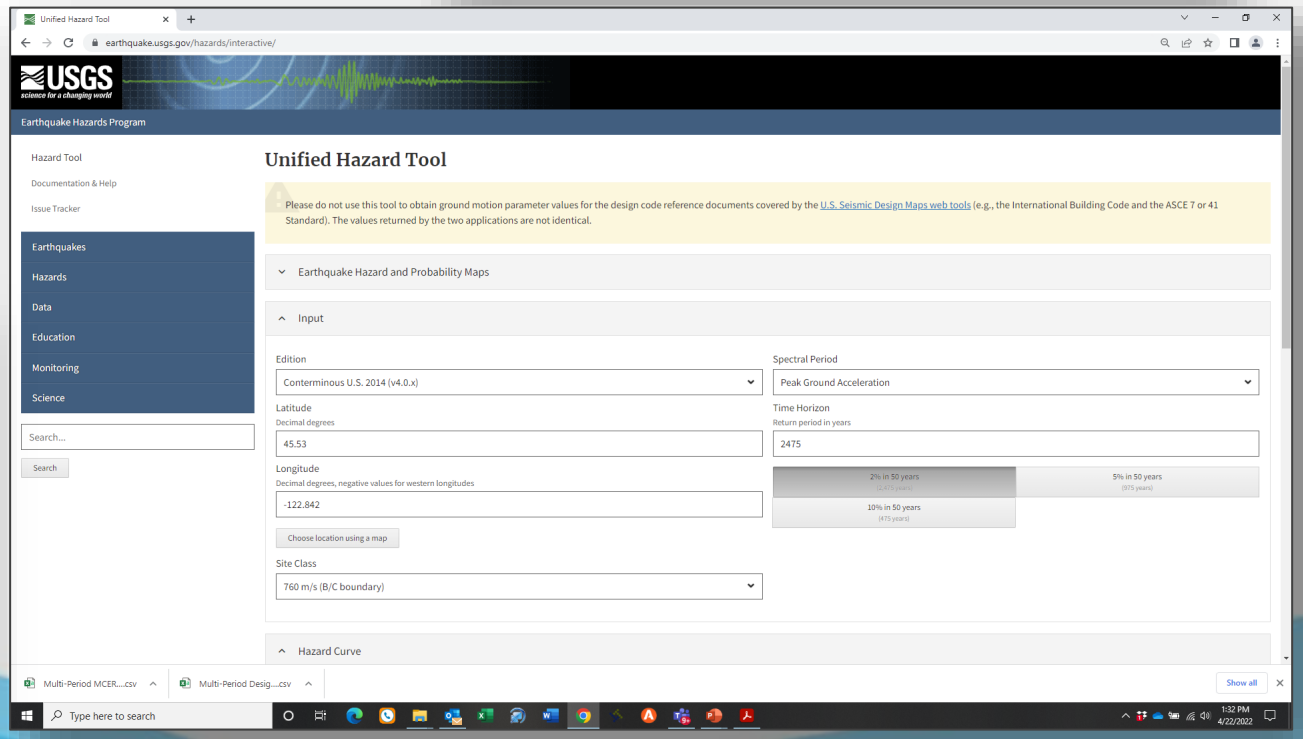

Acceleration values from Program's Probabilistic Seismic Hazard Analysis (PSHA) [Shannon & Wilson, 2017]

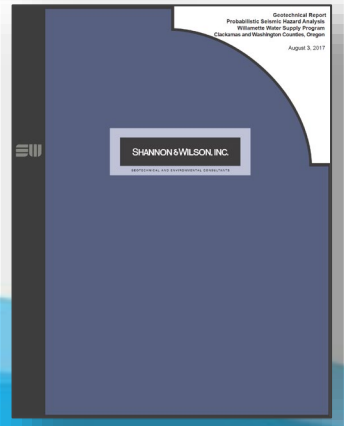

Willamette Water Supply
Our Reliable Water

Transient Ground Shaking Evaluation

Step 4: Calculate ground strain as an axial stress on pipe

				Ground Strain Stress [Accleration Source: PSHA (Table 5-1. 2,475-Year Return Period Mean Uniform Hazard Spectra - Site A)]		
			1 Site Class:	E	DE [1]	D
			2 1 sec Period Spectral Acceleration (g):	1.166	0.996	0.825
			3 PGV (in/s):	43.48	37.14	30.76
				(psi)	(psi)	(psi)
				16,723	14,285	11,831

Here we're assuming Site Class E, then the acceleration we're using is 1.166 g

We calculate the PGV from the acceleration using an equation from ALA (2005)

$$PGV_B = \left(\frac{386.4}{2\pi}\right) SA_1/1.65$$

43.48 in/sec

SA_1 is the spectral acceleration (in g) at 1 second period at 5% damping and is determined directly from the PSHA for ground class B.

$$\varepsilon = \pm \frac{v_{R\theta}}{c_R}$$

Calculate peak ground velocity (PGV) [in/s]

Transient Ground Shaking Evaluation

Step 4: Calculate ground strain as an axial stress on pipe

				Ground Strain Stress [Accleration Source: PSHA (Table 5-1. 2,475-Year Return Period Mean Uniform Hazard Spectra - Site A)]		
			1 Site Class:	E	DE [1]	D
2			1 sec Period Spectral Acceleration (g):	1.166	0.996	0.825
			3 PGV (in/s):	43.48	37.14	30.76
				(psi)	(psi)	(psi)
				16,723	14,285	11,831

$$\varepsilon = \pm \frac{v_{R\theta}}{c_R}$$

4

Select a seismic wave propagation velocity (ft/s)

"Table 3.2 shows results by the ground motion intensity method for the 1971 San Fernando and the 1979 Imperial Valley events, as well as values for other events from more direct techniques. Note that the apparent propagation velocity for S-waves ranged from 2.1 to 5.3 km/sec with an average of about 3.4 km/sec" (O'Rourke and Lui, 2012)

	(km/s)	(ft/s)
Low	2.1	6,900
High	5.3	17,400
Average	3.4	11,200

c = seismic wave propagation speed in the soil at the pipe location. The wave propagation speed may be taken as 13,000 feet per second unless otherwise justified (ALA, 2005)

WWSP used c = 6,500 ft/s. When used in the S-wave equation it's 13,000 ft/s (in the denominator) or in the R-wave equation it's 6,500 ft/s

Transient Ground Shaking Evaluation

Step 5: Check adequacy of pipe design (primarily focused on joint strength)

Axial Stress		
Poissons	5,919	psi
Bend (90°)	8,800	psi
Ground (Site Class E)	16,723	psi
	31,442	psi
Design Yield Stress	45,000	psi
Required Joint Efficieny	**0.70**	

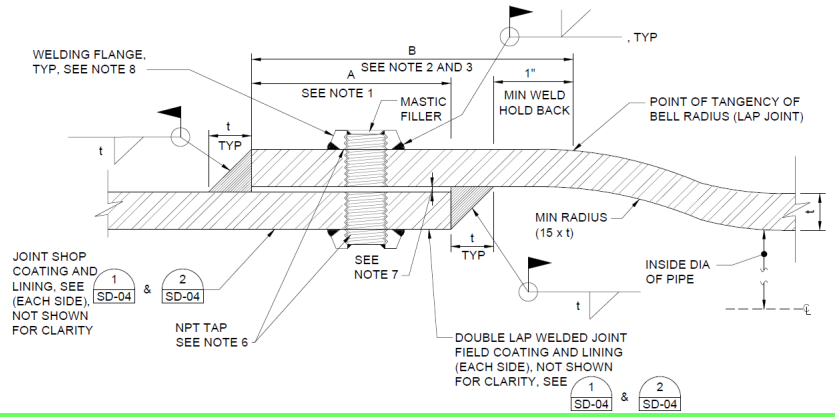

Double Lap Welded Joint (JE = 0.50 for 66"x 3/8" wall)

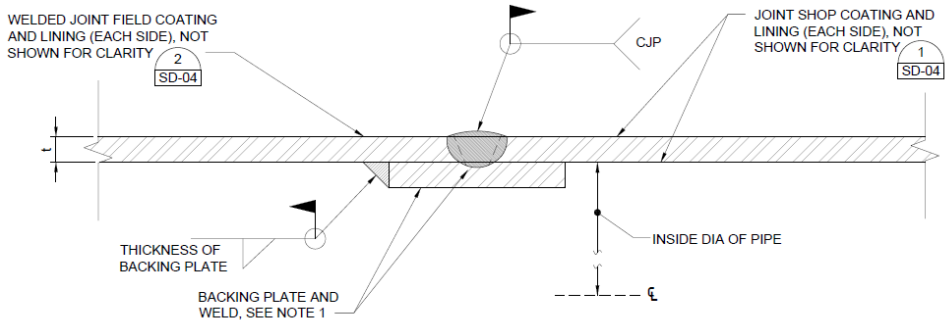

Full Penetration Butt Weld Joint (Joint Efficiency = 0.90)

Transient Ground Shaking Evaluation

Step 6: If capacity of joint is exceeded, calculate the required restrained length and change to stronger joint

M11 Fourth Edition (2004). Figure 13-16.

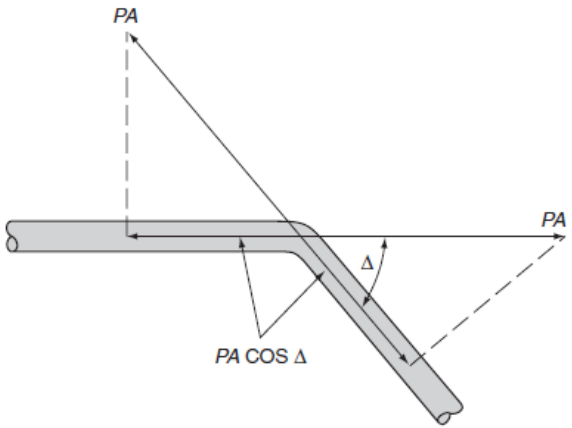

$$L = \frac{PA(1 - \cos\Delta)}{\mu(W_e + W_w + W_p)}$$

(Equation 13-6)

"Tests and experience indicate that the value of μ is not only a function of the type of soil, it is also greatly affected by the degree of compaction, moisture content of the backfill, and type of coating. Care must be exercised in the selection of μ. Coefficients of friction are generally in the range of 0.25 to 0.40. When a high water table or submerged conditions are anticipated, the effects of buoyancy of soil weight must be considered."

Per recommendations from our geotechnical engineer, μ = 0.40 was used

Transient Ground Shaking Evaluation

Example of Results of Seismic QC Check for PLM_4.3

Joint Effecincies at Bends & Butt Weld Restrained Length Required

Drawing No.	Station	Bend Angle (degrees) [rounded up]	Thrust Relative to 90 Degrees	Thrust Force (lbs)	Thrust Stress (psi)	Poissons Axial Stress (psi)	Ground Strain Stress [Accleration Source: PSHA (Table 5-1. 2,475-Year Return Period Mean Uniform Hazard Spectra - Site A)]			Total Axial Stress	JE	Total Axial Stress	JE	Total Axial Stress	JE	Minimum Depth of Cover (ft)	Backfill Material	Backfill Prism Weight (lb/ft)	Butt Joint Length Required (feet)	Comments
						Site Class:	E	DE [1]	D	Site Class	Site Class	Site Class	Site Class	Site Class	Site Class					
						1 sec Period Spectral Acceleration (g):	1.166	0.996	0.825											
						PGV (in/s):	43.48	37.14	30.76	E	E	DE	DE	D	D					
							(psi)	(psi)	(psi)	(psi)		(psi)		(psi)						
PP-02/PP-02A	615+67.59	27	0.11	83,546	1,075	5,919	16,723	14,285	11,831	23,717	**0.53**	21,279	0.47	18,825	0.42	3	Native	1,898	38	**Butt welds required within 40 ft of joint at bend.**
PP-05	629+03.58	4	0.00	0	0	5,919	16,723	14,285	11,831	22,642	**0.50**	20,204	0.45	17,750	0.39	5	N/A	N/A	N/A	No additional measures needed. Small bend angle, N-S alignment, and Site Class DE.
PP-05	630+05.51	4	0.00	0	0	5,919	16,723	14,285	11,831	22,642	**0.50**	20,204	0.45	17,750	0.39	6	N/A	N/A	N/A	No additional measures needed. Small bend angle, N-S alignment, and Site Class DE.
PP-06	634+05.56	24	0.09	68,355	880	5,919	16,723	14,285	11,831	23,522	**0.52**	21,084	0.47	18,630	0.41	4	Native	2,530	26	**Butt welds required within 30 ft of joint at bend.**
PP-06	635+08.95	14	0.03	22,785	293	5,919	16,723	14,285	11,831	22,935	**0.51**	20,497	0.46	18,043	0.40	5	Native	3,163	8	**Butt welds required within 10 ft of joint at bend.**
PP-06	636+10.55	14	0.03	22,785	293	5,919	16,723	14,285	11,831	22,935	**0.51**	20,497	0.46	18,043	0.40	5	Native	3,163	8	**Butt welds required within 10 ft of joint at bend.**
PP-06	637+10.46	28	0.12	91,141	1,173	5,919	16,723	14,285	11,831	23,815	**0.53**	21,377	**0.48**	18,923	0.42	3.5	Native	2,214	37	**Butt welds required within 40 ft of joint at bend.**
PP-07	638+93.14	9	0.01	7,595	98	5,919	16,723	14,285	11,831	22,740	**0.51**	20,302	0.45	17,848	0.40	4	Import	2,860	3	**Butt weld joint each side of bend fitting**. Borderline between Site Class E and DE.
PP-09	648+66.65	46	0.31	235,447	3,030	5,919	16,723	14,285	11,831	25,672	**0.57**	23,234	**0.52**	20,780	0.46	4	Import	2,860	79	**Butt welds required within 80 ft of joint at bend.**
PP-10/PP-10A	656+36.62	64	0.56	425,323	5,473	5,919	16,723	14,285	11,831	28,115	**0.62**	25,677	**0.57**	23,223	**0.52**	5	Native	3,163	132	**Butt welds required within 140 ft upstream of joint at bend.**
				425,323												5	Native	1,447	337	**Buoyant conditions downstream. Butt welds required within 340 ft downstream of joint at bend.**
PP-11/PP-11A	658+35.95	73	0.71	539,249	6,939	5,919	16,723	14,285	11,831	29,581	**0.66**	27,143	**0.60**	24,689	**0.55**	8	Native	**Buoyant**	**To Upstream Bend**	Retrieval Shaft (horiz. bend in shaft)
		90	1.00	759,505	9,773	5,919	16,723	14,285	11,831	32,415	**0.72**	29,977	**0.67**	27,523	**0.61**	8	Native	**Bouyant**	**To Upstream Bend**	Retrieval Shaft (vert. bend in shaft)
PP-15/PP-15A	678+51.79	90	1.00	759,505	9,773	5,919	16,723	14,285	11,831	32,415	**0.72**	29,977	**0.67**	27,523	**0.61**	11	Native	6,958	122	**Butt Welds north past wetland.** Jacking Shaft (vert. bend in shaft)
PP-17/PP-17A	689+64.51	41	0.25	189,876	2,443	5,919	16,723	14,285	11,831	25,085	**0.56**	22,647	**0.50**	20,193	0.45	6	Native	**Bouyant**	**Special**	**Butt welds upstream (south) to shaft and downstream to next bend.** Less cover upstream.
PP-17/PP-17A	691+43.47	44	0.28	212,661	2,736	5,919	16,723	14,285	11,831	25,378	**0.56**	22,940	**0.51**	20,486	0.46	5.5	Import	3,933	56	**Butt welds upstream to next bend and downstream (north) to 60 ft beyond bend.**

Pipeline Sections PLM_4.1, 4.2, 4.3, and 4.4

Seismic Hazard: Transient Ground Shaking & Associated Joint Efficiency

Combination of load factors important: Axial stress from ground shaking, Poisson's stress, and thrust near bends

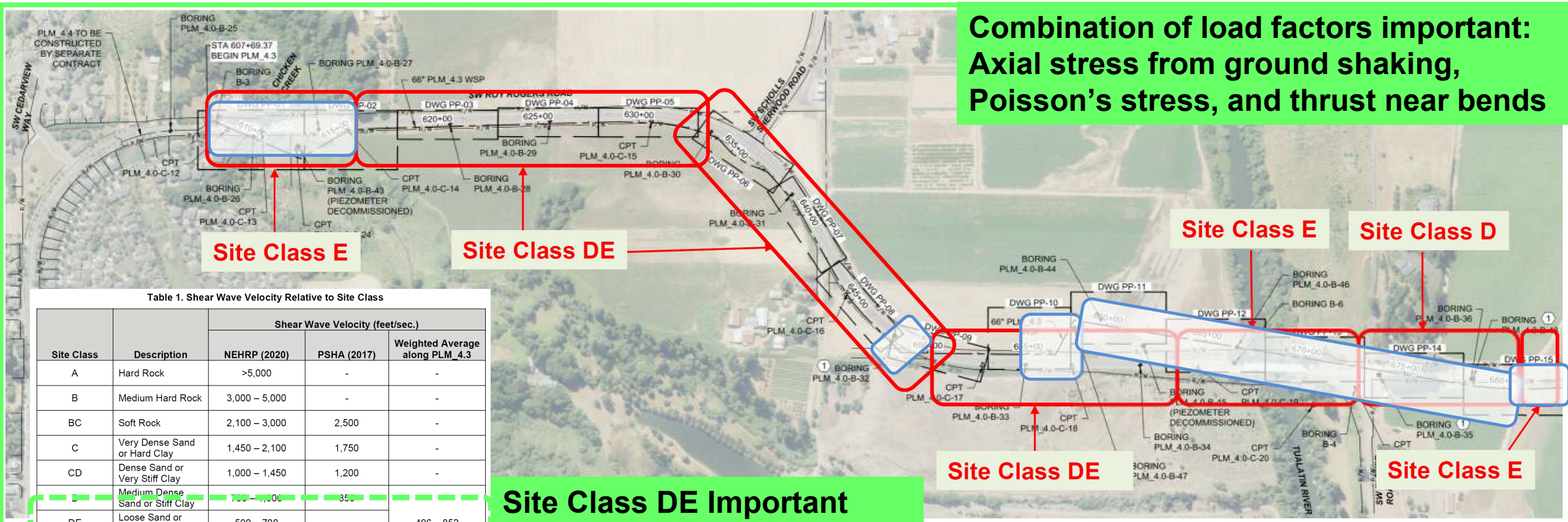

Table 1. Shear Wave Velocity Relative to Site Class

Site Class	Description	Shear Wave Velocity (feet/sec.)		
		NEHRP (2020)	PSHA (2017)	Weighted Average along PLM_4.3
A	Hard Rock	>5,000	-	-
B	Medium Hard Rock	3,000 – 5,000	-	-
BC	Soft Rock	2,100 – 3,000	2,500	-
C	Very Dense Sand or Hard Clay	1,450 – 2,100	1,750	-
CD	Dense Sand or Very Stiff Clay	1,000 – 1,450	1,200	-
D	Medium Dense Sand or Stiff Clay	700 – 1,000	350	
DE	Loose Sand or Medium Stiff Clay	500 – 700	-	496 – 852
E	Very Loose Sand or Soft Clay	<500	500	
F	Soils Requiring Site Response Analysis	-	-	-

Site Class DE Important Change from NEHRP (2020)

Approach: ***Change joint type where capacity of double lap weld is exceeded***

Developed Spreadsheet Tool to Assess Joint Efficiency ***NEW PRACTICAL APPROACH***

Transient Ground Shaking Evaluation

Step 7: Check stresses in mitered bends

M11 Fourth Edition (2004). Figure 9-2.

$$t = \frac{PD}{2f}\left[1 + \frac{D}{3R - 1.5D}\right]$$

(Equation 9-3)

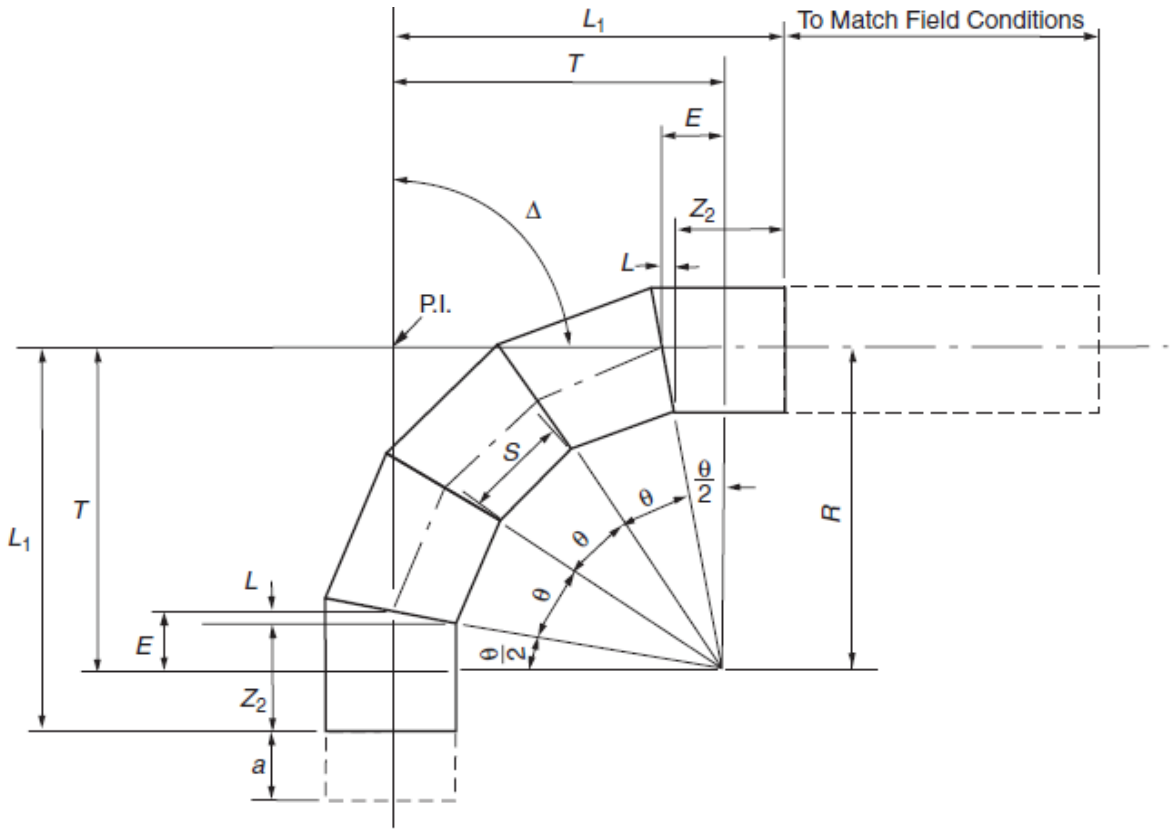

F. Five-Piece Elbow (More Than 67.5° to 90°)

For R/D = 2.5 used by the program, this results in a 17% stress increase in the due to the miter cuts in the pipe wall

Transient Ground Shaking Evaluation

Step 7: Check stresses in mitered bends

WWSP PLM_4.3 Final Seismic QC Check (Bends)

[Based 100% Submittal, November 2021]

Hydraulic Condition	Station	HGL (ft)
Max. Steady State	607+67.39	610
	639+83.09	573
Maximum Surge	607+67.39	615
	639+83.09	582

Case 1 – Checking for minimum required wall thickness

Case 2 – Checking for maximum combined stress

f = 21,000 psi

f = 33,750 psi

				Case 1				Case 2										
										Thurst Force		Axial Stress				17% Bend	Total	
		Bend Angle	Invert Elev.	HGL	Pressure	*t*		HGL	Pressure	Thrust Rel.	Thrust	Thrust	Poissons	Site E	Site DE	Correction	Stress	
Drawing No.	Station	[Rounded up]	(ft)	(ft)	(psi)	(in)	Comments	(ft)	(psi)	to 90°	(lbs)	(psi)	(psi)	(psi)	(psi)	(psi)	(psi)	Comments
PP-02/PP-02A	615+67.59	27	153.5	600.8	193.6	0.365	Okay	608.0	196.8	0.11	74,062	953	5,247	16,723		3,897	26,820	Okay (<33.75 ksi)
PP-10/PP-10A	656+36.62	64	121	554.0	187.4	0.354	Okay	572.6	195.5	0.56	374,552	4,820	5,213		14,285	4,134	28,452	Okay (<33.75 ksi)
PP-17/PP-17A	689+64.51	41	110	515.7	175.6	0.331	Okay	543.6	187.7	0.25	160,540	2,066	5,005	16,723		4,045	27,839	Okay (<33.75 ksi)

Checking two cases:

Case 1 – normal maximum operating conditions limiting stress to 21 ksi

Case 2 – maximum transient conditions with ground strain limiting stress to 33.75 ksi (75% of yield)

Transient Ground Shaking Evaluation

Considerations Related to 30-inch Class 52 DIP

(Boltless segment restrained joints used)

1. Calculate max. ground strain for Site Class E soils: **5.6×10^{-4}**
2. Convert to stress using modulus of elasticity for ductile iron (24×10^6 psi): **13,400 psi as an axial stress *ONLY* if it were completely locked out in full tension**
3. 30-inch Class 52 DIP Flex-Ring joint has an allowable pull load of 220,000 lbs (per American Pipe literature for HDD installations)

Procedure under development

Consideration should be given due to:

- Pipe strain would be less than ground strain due to slippage
- "Segmented pipe" installed in the "neutral" position to allow strain relief **[this would be relieved by ~ 1/8-inch of movement which is achieved at installation]**

Due to axial movement capacity provided during installation of pipe to approx. neutral position (required for the contractor and verified by inspection), loading should not exceed capacity of pipe *[Further development of design procedure plus testing of joints by industry is needed to confirm appropriate seismic design practice for DIP]*

Concluding Remarks

Considerations for the effects of transient ground shaking:

- Deeper deposits of poor soils
- High internal pressures near bends
- There is uncertainty in what values to use in these equations
  - Using the R-wave formula to check for excessive axial stress in poorer soils is also effectively a check for an S-wave with C_s = 1 km/s

"Work by Zerva and Harada (1997) generally supports this view. In subsequent chapters, a lower-incoherence influenced-effective propagation velocity for S-waves will be utilized. Specifically, ground strains from Equation 3.7 with C_s taken as 1,000 m/sec are shown in Chapter 10 to be consistent with observed damage to the Potrero Canyon gas pipeline. The same approach (Equation 3.7 with C_s=1,000 m/sec) is used in Chapter 12 to develop fragility relations for segmented pipelines" (O'Rourke and Liu, 2012)

The goal was to implement a practical approach to check pipe joints for more critical conditions

Mike Britch, P.E., MPA

Engineering and Construction Manager

Willamette Water Supply Program

mike.britch@tvwd.org

info@ourreliablewater.org

www.ourreliablewater.org

Willamette Water Supply
Our Reliable Water