Bozeman Montana Innovative Approach to Membrane Procurement and Design

Piloting, Procuring, Permitting, and Planning for a Membrane WTP in Bozeman

Nathan Kutil, HDR, nathan.kutil@hdrinc.com
Rick Moroney, City of Bozeman, rmoroney@bozeman.net

HDR

ONE COMPANY | *Many Solutions*®

Existing Plant Background

- Constructed in 1983
- Cost = $1M
- Current Capacity = 15 MGD
- Bozeman 5% Growth

Existing Plant Background

- 3 Intakes
  - Sourdough
  - Hyalite (pressure)
  - Hyalite (gravity)
- Twin Flocculation Basins
- 12 Dual Media Filters
- Gaseous Cl2 Disinfection

Existing Plant Background

- Aging infrastructure
- Obsolete equipment and technology
- Limited capacity
- Intake reliability
- More stringent regulations
- Potential for degraded raw water quality

2005 Water Facility Plan

- Options Considered
  - Short-term upgrade of existing facility
  - 20-year upgrade to existing plant, add peaking plant
  - New direct filtration facility
  - New contact adsorption clarification facility
  - New conventional sedimentation/filtration facility
  - New membrane filtration facility

2005 Water Facility Plan Selected Membrane Filtration

- Reasons Membrane Filtration Selected
  - Superior technical feasibility for compliance with future regulations
  - Avoids loss of interim improvements when buildout expansion is implemented
  - Ease of phasing for capacity expansions

Piloting

Pilot Study Objectives

Primary Objective

- Determine which Systems are Reliable and Meet Treatment Requirements of the Project (as defined in Pilot Protocol)
- Establish Design Criteria for Full-Scale Operation

Secondary Objective

- Optimize Use of Coagulants
- Determine Pretreatment Requirements
- Provide City staff with Hands-On Experience with Membranes (Maintenance)

Specific Concerns

- Impacts of Flashy Source Water on Membrane Performance (incl. Turbidity, Iron, Manganese, Color, etc.)
- Winter Operation – Cold Temperatures/Low Turbidity
- Spring Operation – Moderate Temperatures/High Turbidity
- Pretreatment Requirements, especially in light of wildfire risk in watershed(s)
- Regulatory Compliance, both with LT2ESWTR and Discharge Permit

Pilot Layout

- 3 Membrane Systems
  - Engineering equivalent of many full scale systems in Montana

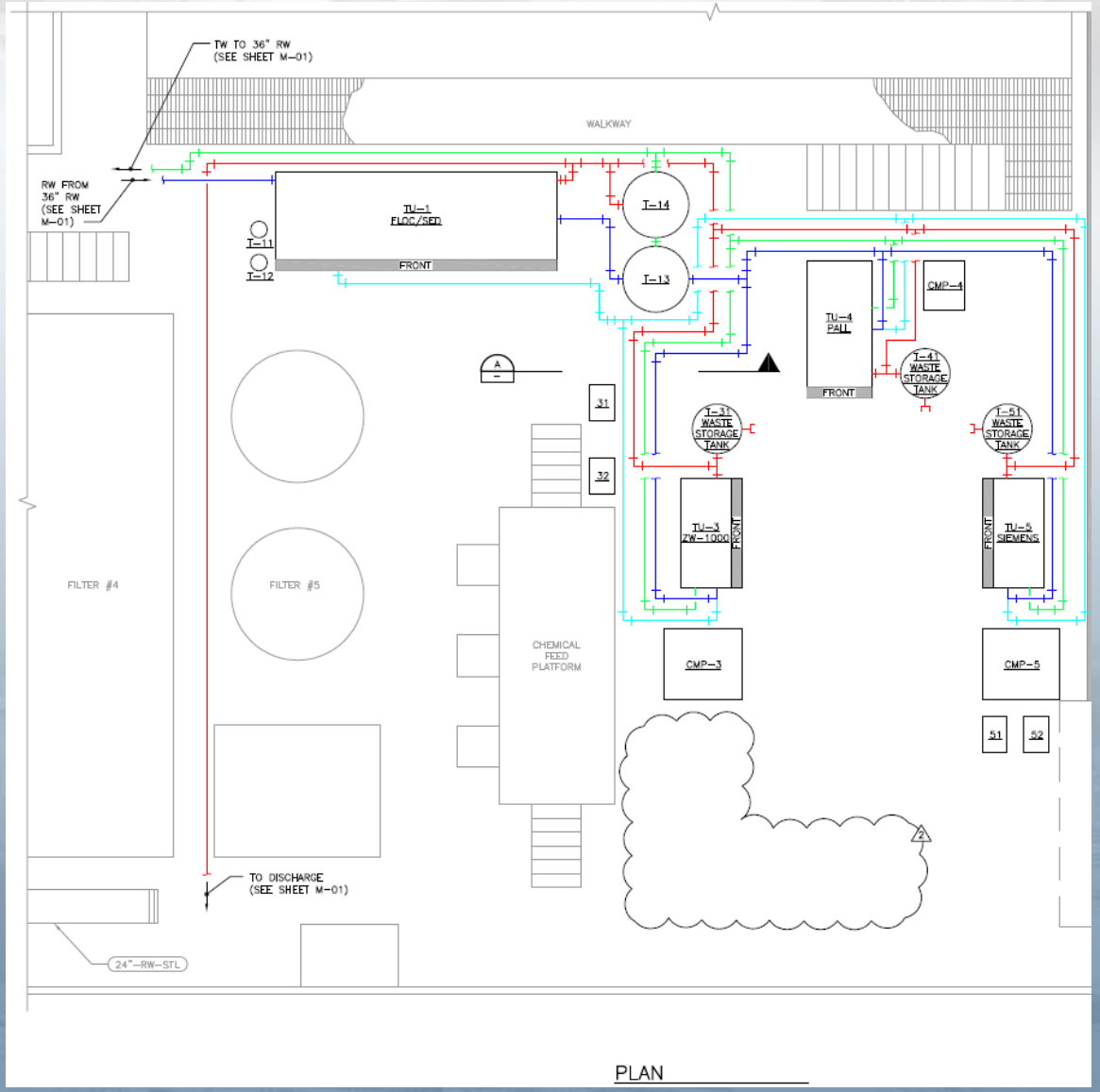

Membrane Integrity Testing and Fiber Cut/Repair Demonstration

- Results
  - Pressure – PASSED
  - Submerged – PASSED
  - One System – FAILED

Overall Results

Description	Units	Value
Avg. Feed Turbidity	NTU	3.87
Pressure Membrane Avg. Permeate Turbidity	NTU	0.011
Submerged Membrane Avg. Permeate Turbidity	NTU	0.044
Pressure Membrane Avg. Flux	GFD	78.8
Submerged Membrane Avg. Flux	GFD	46.8
Pressure Membrane Avg. Recovery	%	96.8
Submerged Membrane Avg. Recovery	%	95.8

Procurement

Why Procure Membranes

- Systems vary
- Design focus
- Plan for cost

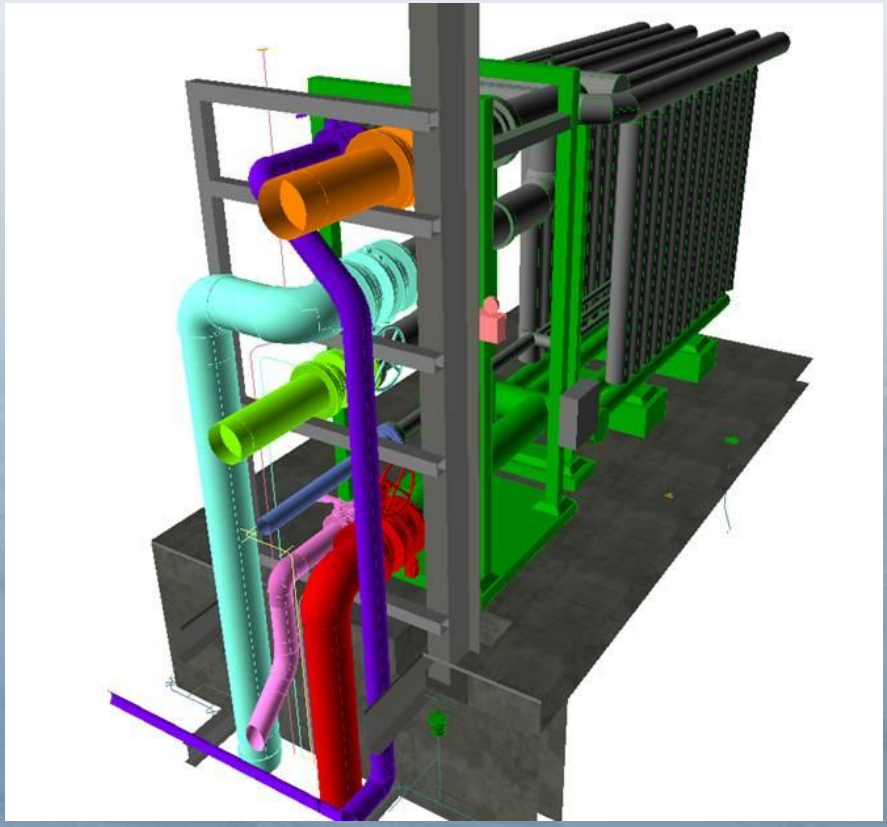

Procurement Design Parameters

- Max Daily Q:
  - 22 MGD (10°C) 95% recovery
  - 12 MGD (0.1°C) 95% recovery
- Max Instantaneous Flux
  - 77.3 gfd (10°C) pressure
  - 40.9 gfd (10°C) submerged

Bid Pressure vs. Submerged

- How to fairly bid
- 20-year present worth
  - Capital cost
  - Energy cost
  - Chemical cost
  - Waste disposal cost
  - Membrane replacement cost
  - Installation cost (concrete)

Bid Evaluation

- 20-year present worth – 65 points
- Fiber integrity – 10 points
- Regulatory acceptance (CA) – 5 points
- Operational history – 5 points
- Replacement labor – 5 points
- Fiber isolation – 5 points
- Pilot maintenance – 5 points

Bid Day

- Submerged membrane supplier did not bid
- Pressure membrane supplier gave a great bid ($5.1M)

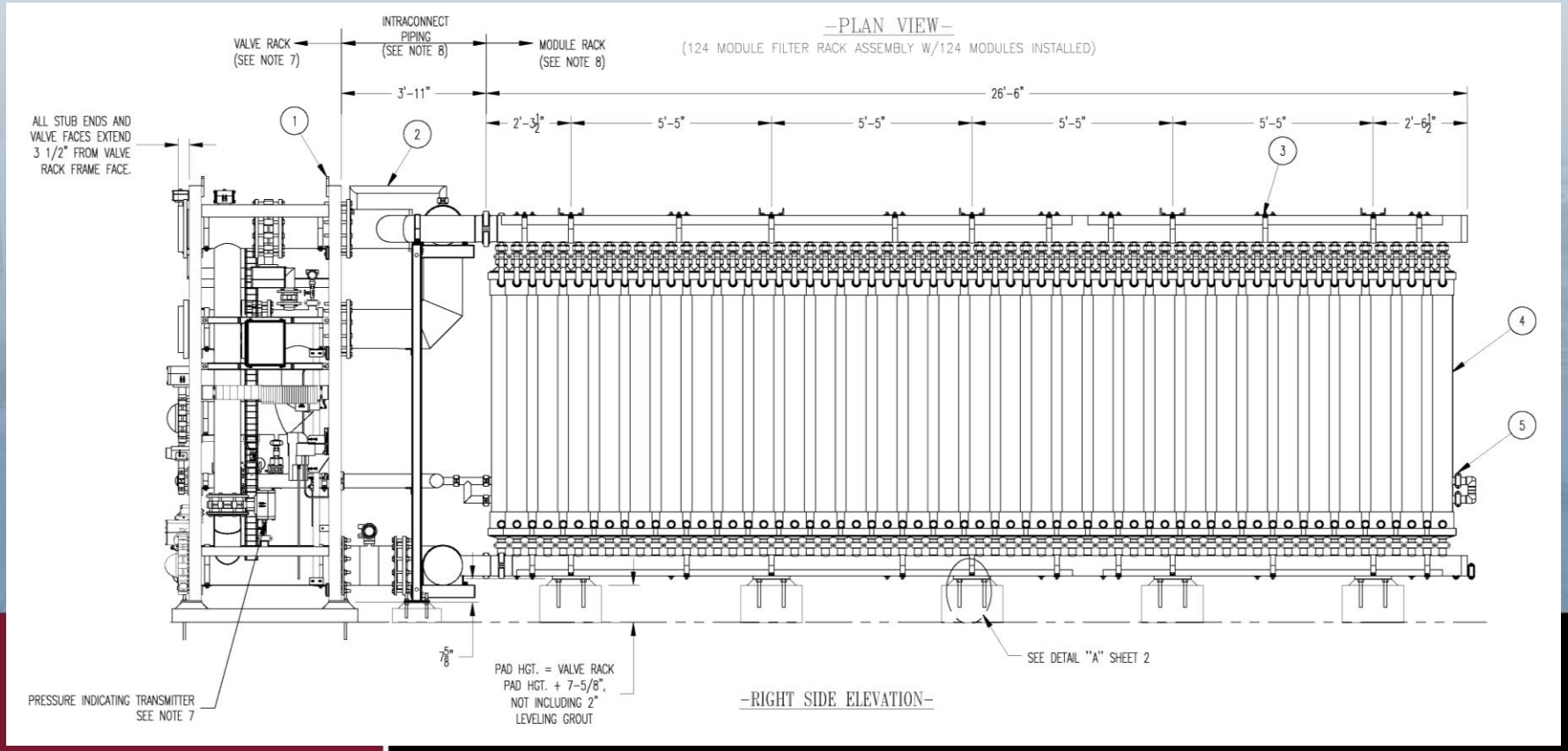

Permitting

MDEQ

- Involve regulators early and often
- New to them as well as operators

MDEQ

- 1st Certification of this type in MT
  - 6 months of conference calls
  - Regulators quit and hit by trees
  - Go-bys (other states)
  - Membrane expert, Dr YuJung Chang
- New standard for others to follow

Membrane Testing Data

- Vendors data not in compliance with membrane filtration guidance manual
- Data collected prior to LT2
- 3rd Party Challenge Test (non-destructive)
  - E-Coli feed concentrations
  - Crypto challenge for QCRV
- Requested 4-log credits for Bozeman

Project Review

- Model walk thru
- Q&A
- Expedited review

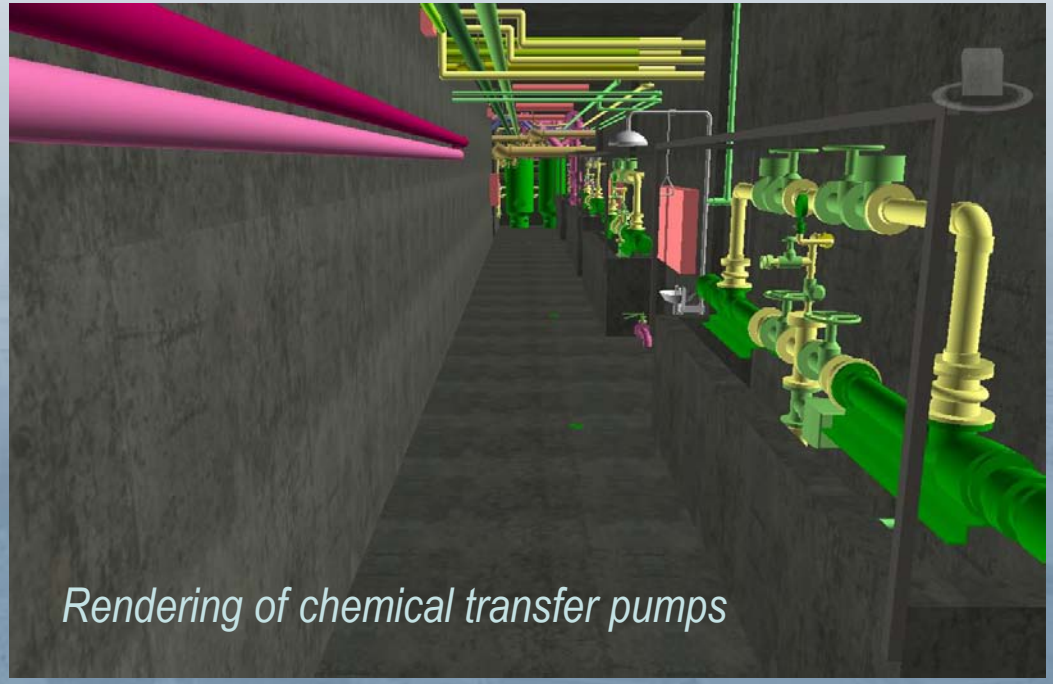

Rendering of chemical transfer pumps

Planning (Pre-design)

Predesign Report

- 16 chapters
- 6 Appendices
- Everything from codes to naming conventions to floor plans
  - Preliminary P&IDs
  - Preliminary equipment list
- 30% Complete
- Cost Estimate (is it still affordable?)

Barn Look Example

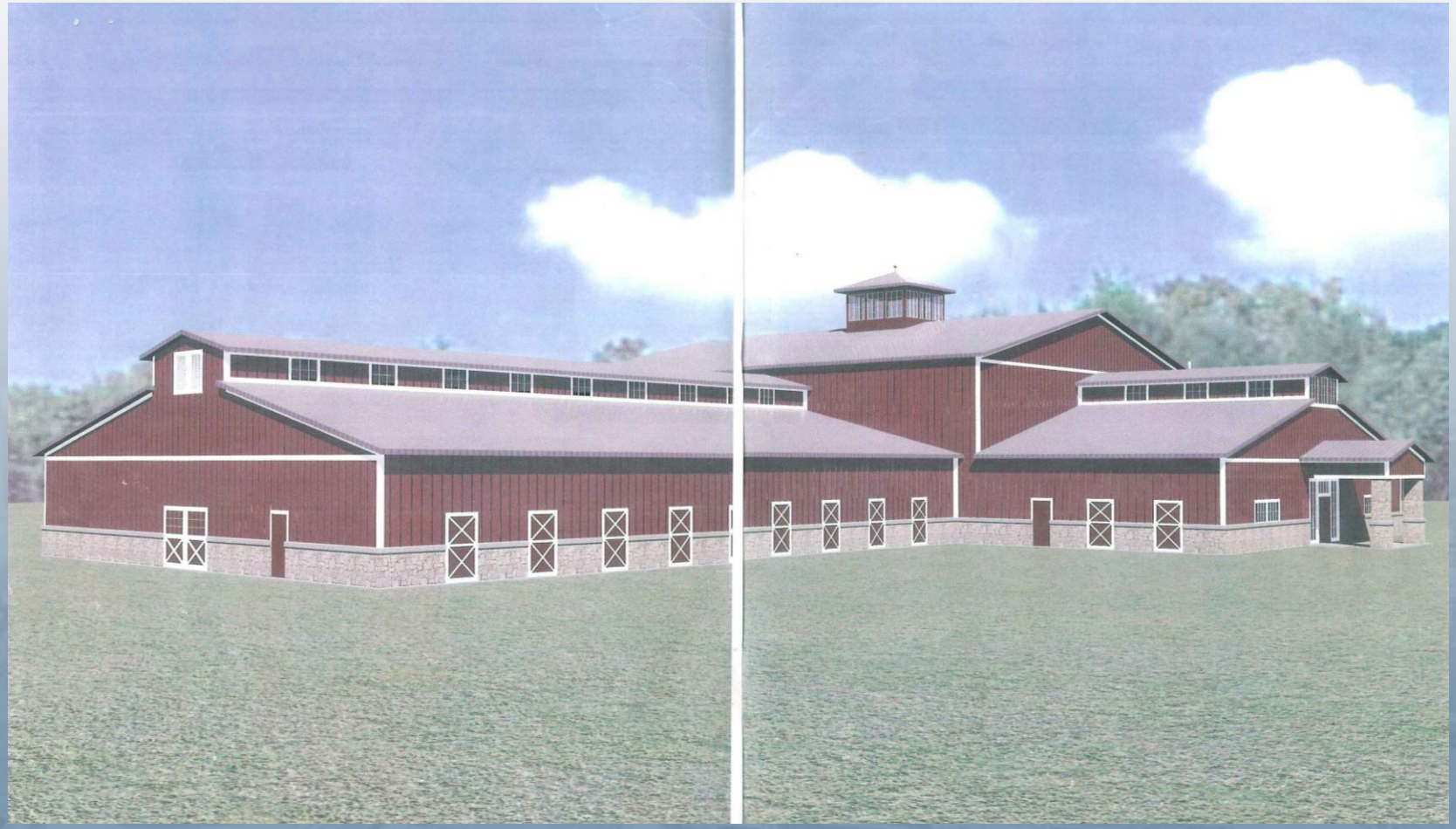

Barn Look Bozeman

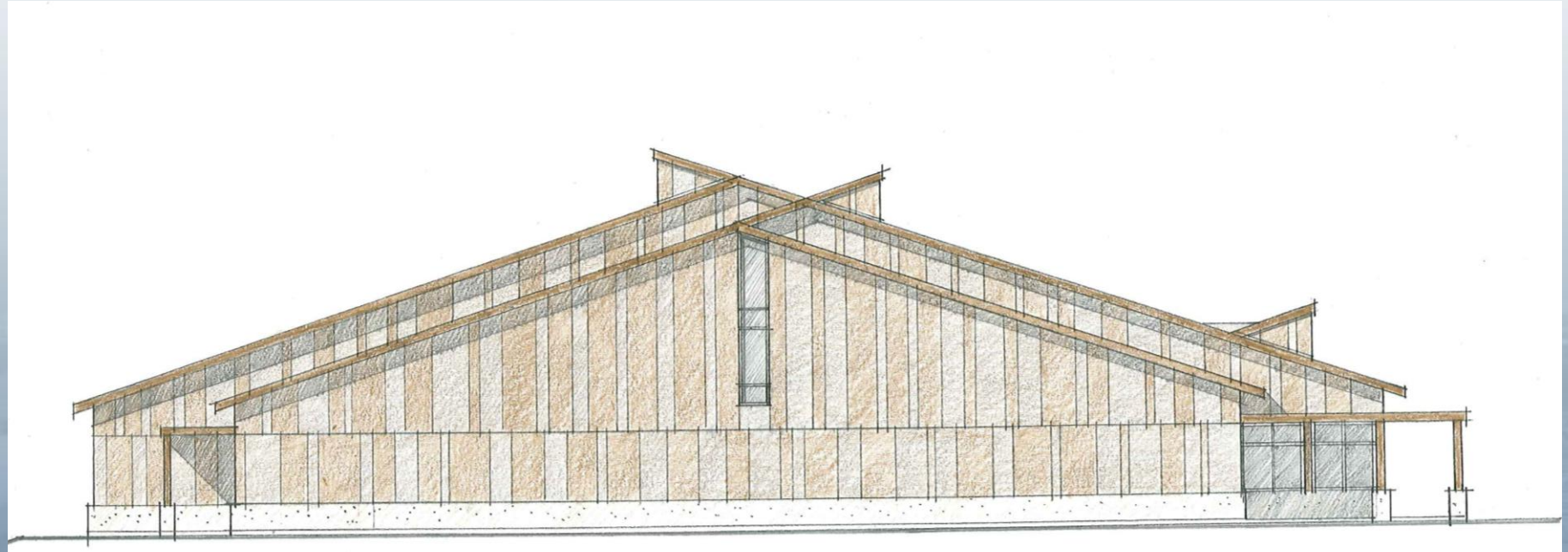

East Elevation

Preliminary Floor plan

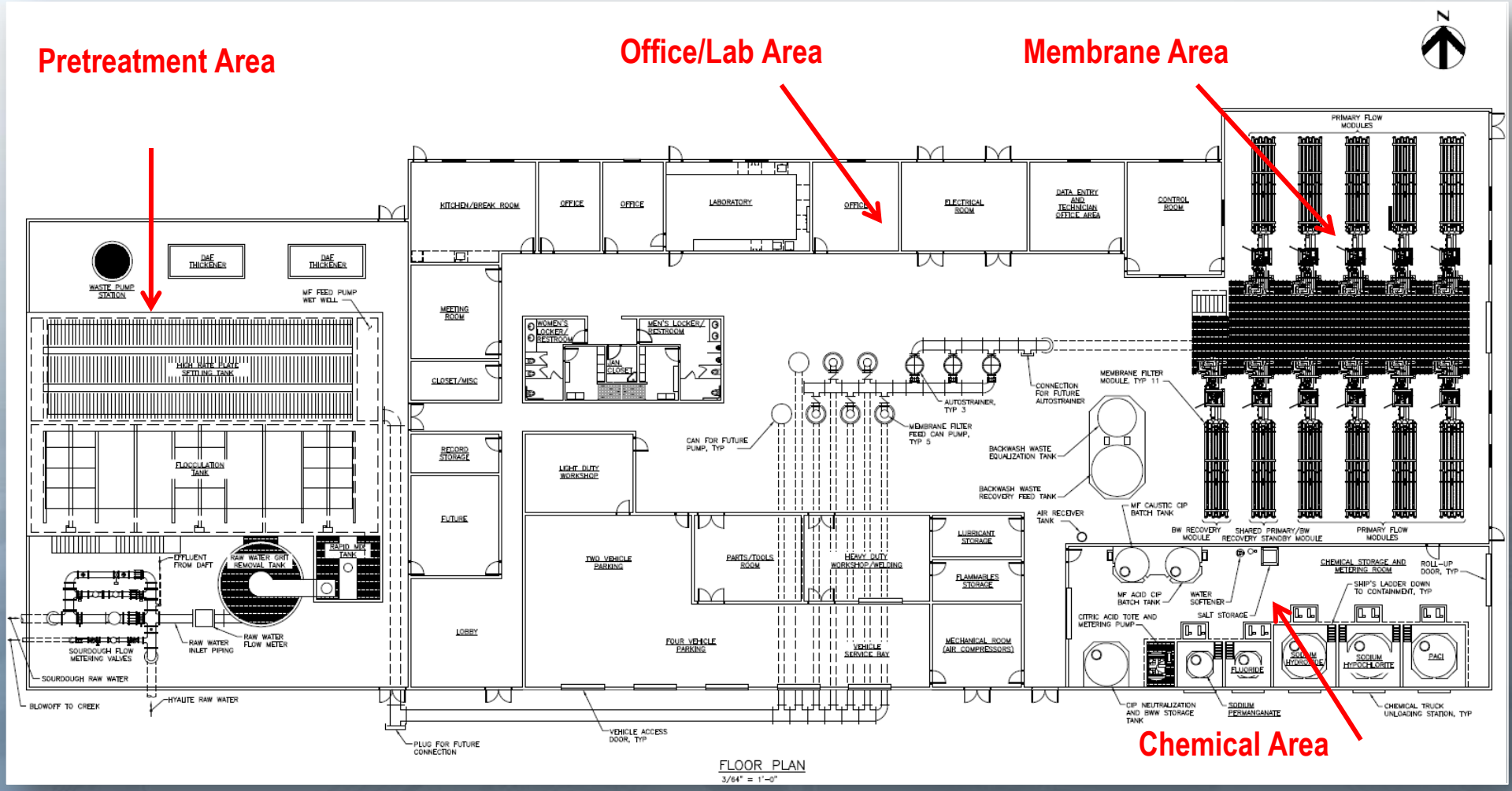

Planning (Final Design)

Sourdough Intake

- Proposed Intake
  - Infiltration Gallery
  - Backwash
  - Air
  - Water
  - Flow Controlled at Plant

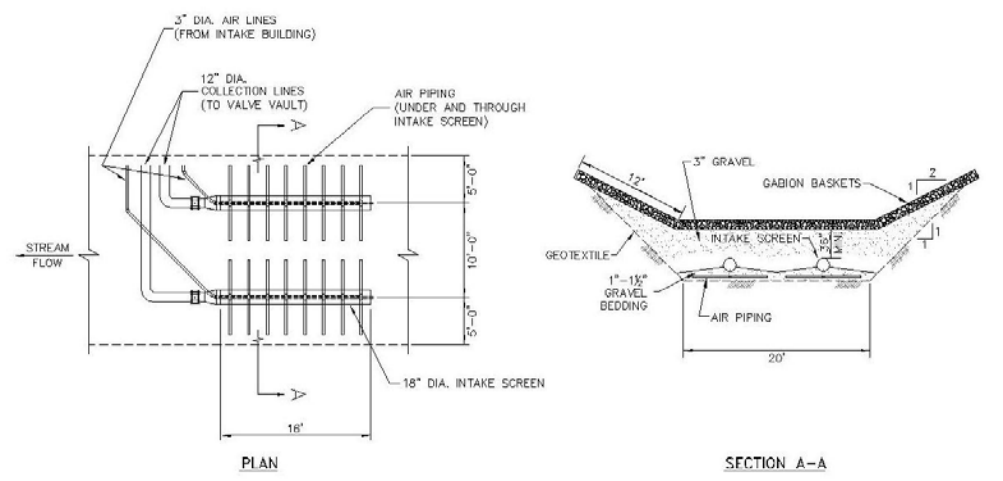

Liquid Stream

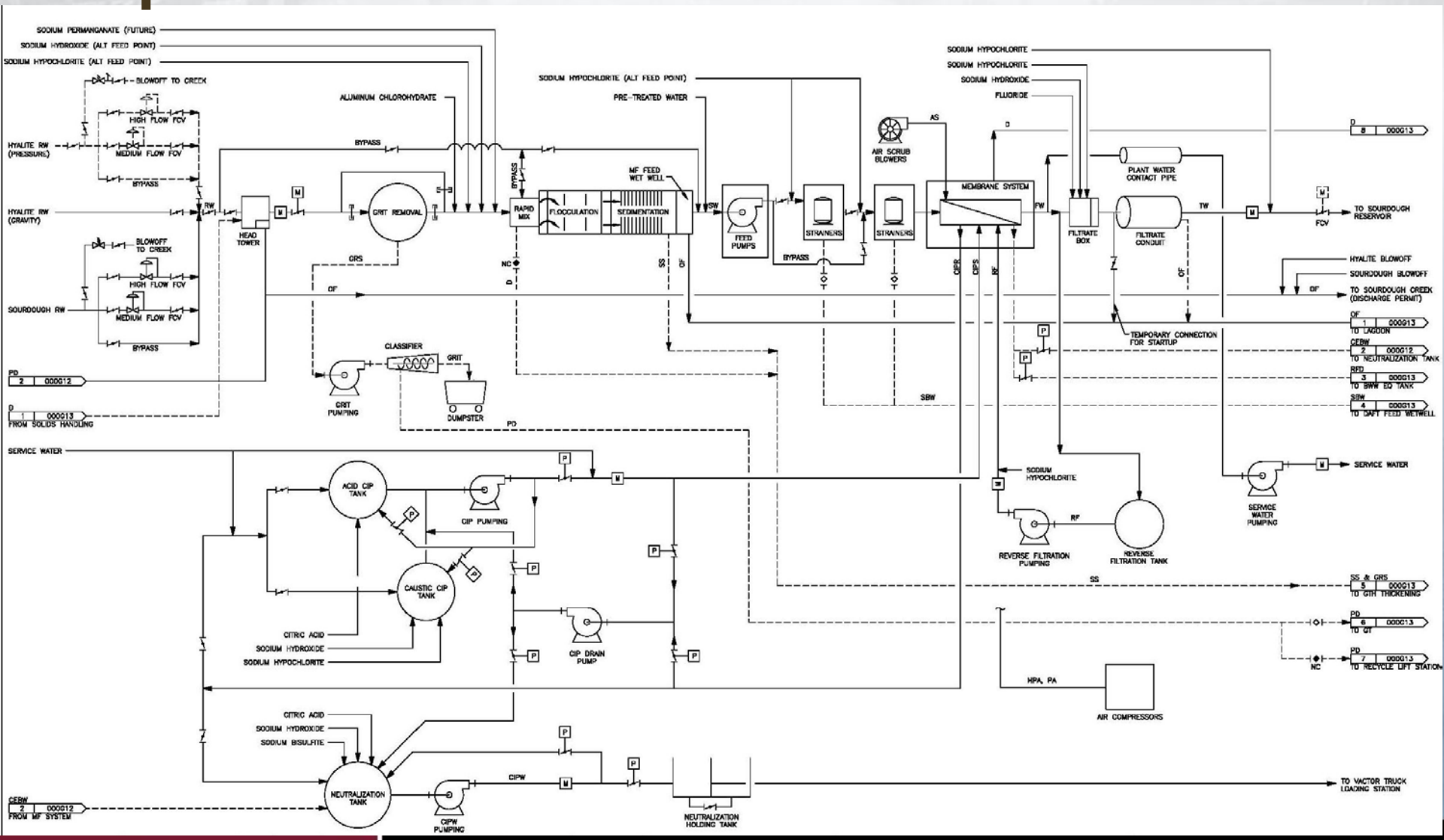

Residuals Streams

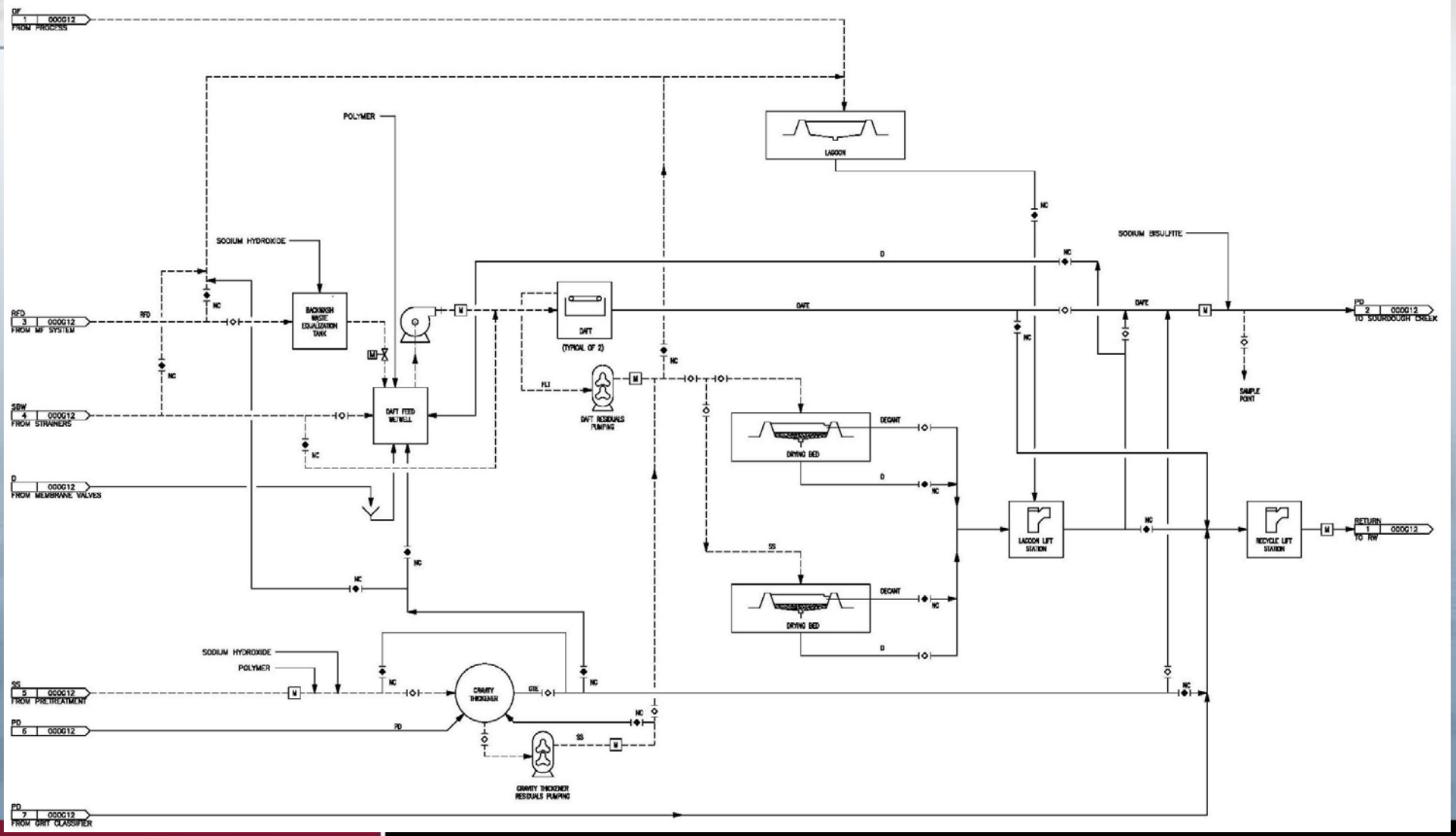

Floor plan

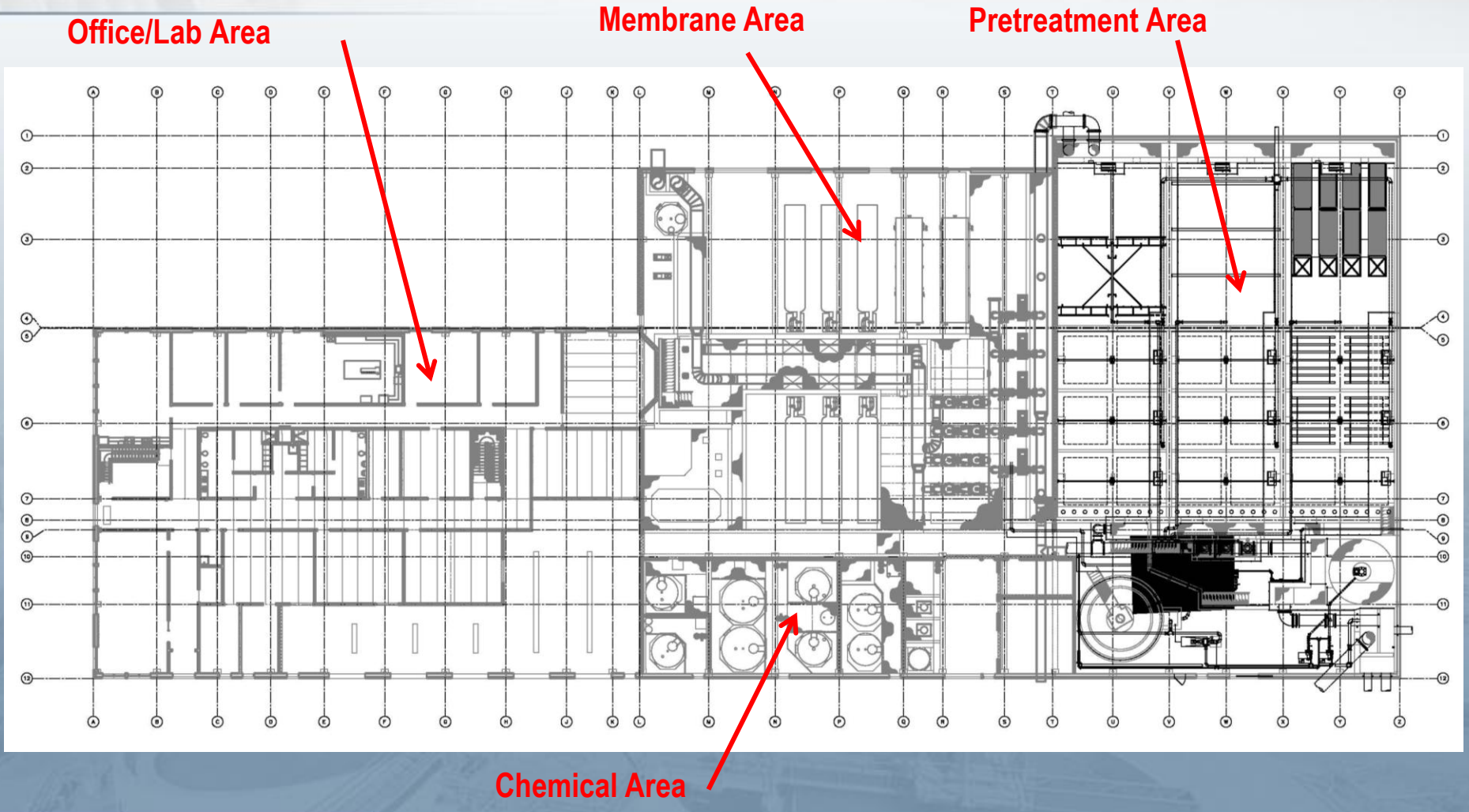
Office/Lab Area
Membrane Area
Pretreatment Area
Chemical Area

Exterior Rendering (looking southwest)

Model of Membrane Treatment Area

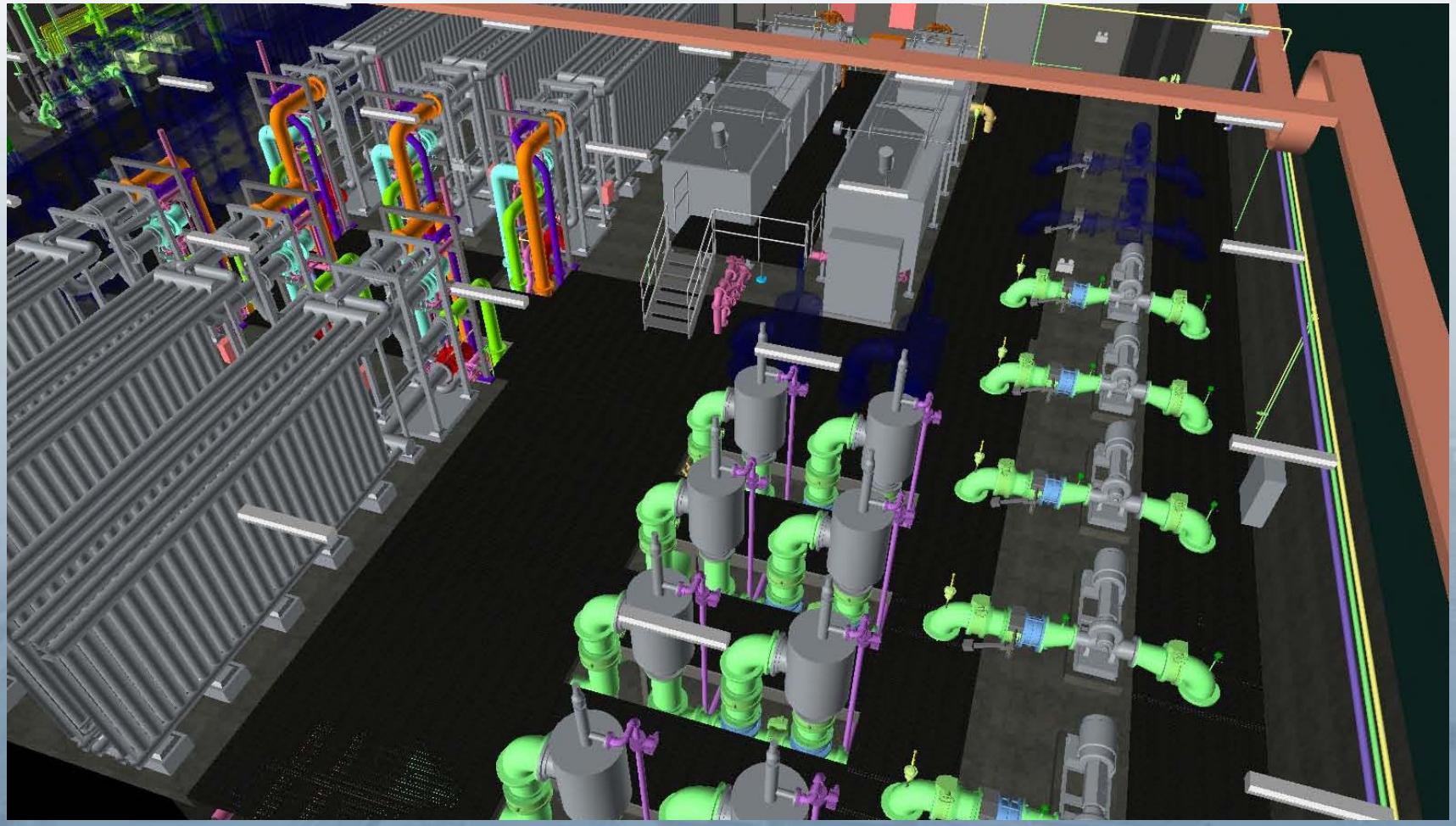

Model of Process Area

Interesting Project Aspects

- Contact Conduit
- Chemical Fill/Safety
- Grit Removal
- No Sewer
- Potential Hydropower

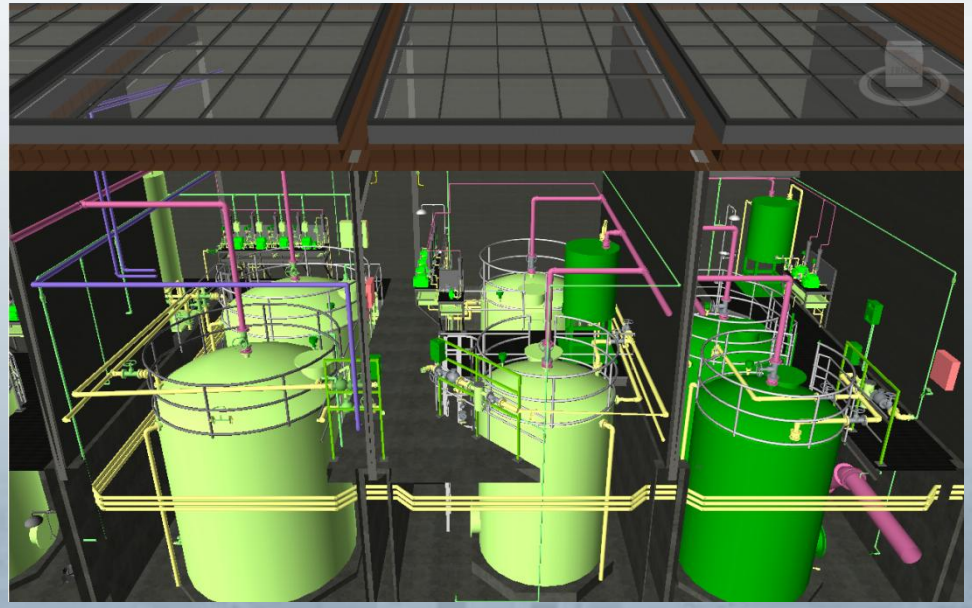

Rendering of chemical storage area

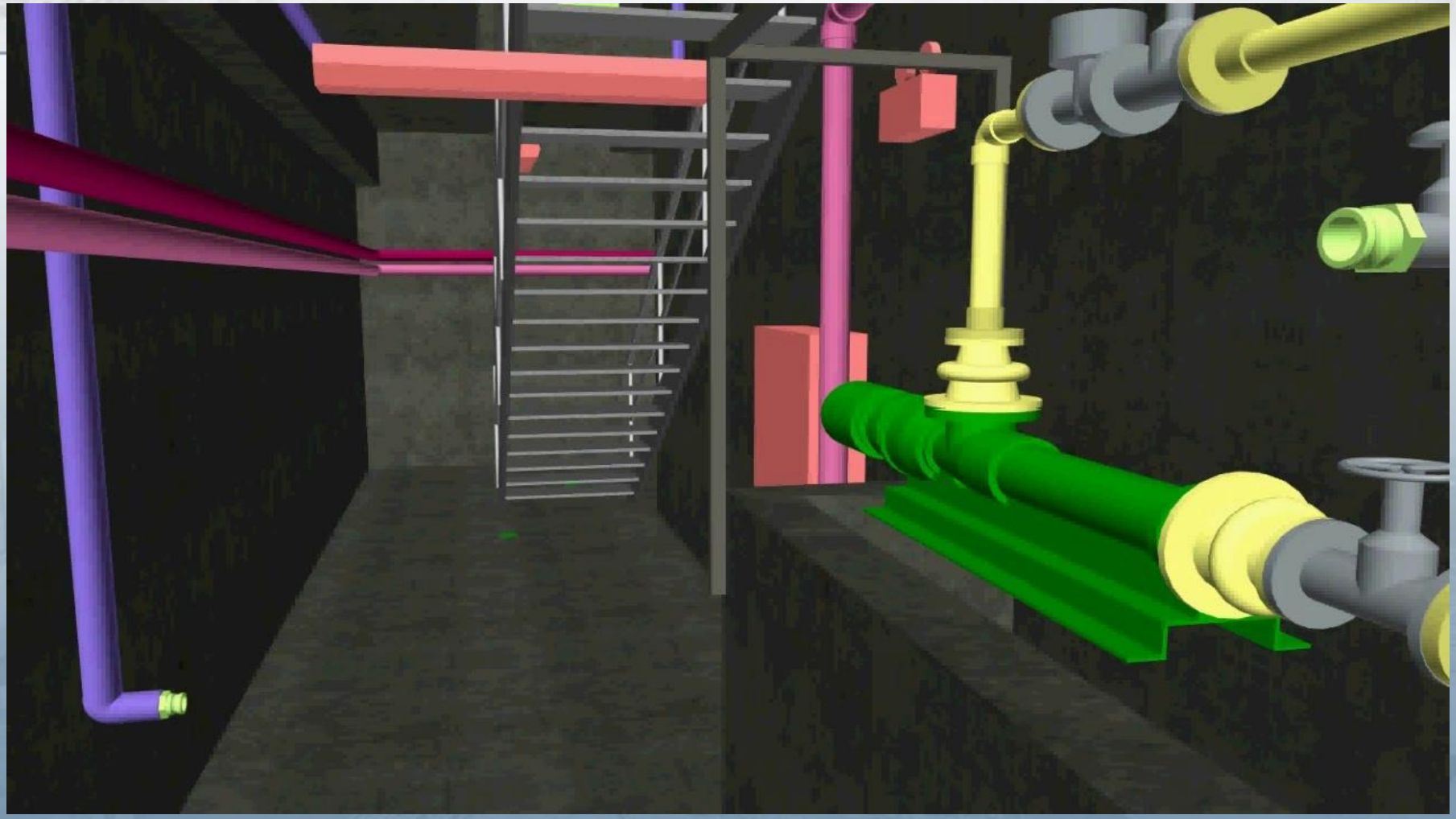

Cost Estimate

- Estimated Project Cost
  - $25 - 30M for installation
  - $5.5M for membranes
  - $6.4M for engineering

  - **Total Project Cost ~$42M**

Where to From Here ?

QUESTIONS?

Nathan Kutil, HDR, nathan.kutil@hdrinc.com

Rick Moroney, City of Bozeman, rmoroney@bozeman.net