Fluoride Addition – Basic Concepts and Lessons Learned

Russell Porter, P.E.
Gray & Osborne, Inc.

AWWA PNWS Annual Conference
May 4, 2011

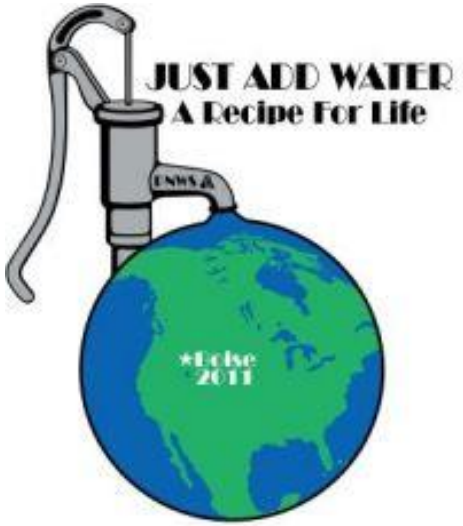

Use of Fluoride

- “Fluoride is voluntarily added to some drinking water systems as a public health measure for reducing the incidence of cavities among the treated population. The decision to fluoridate a water supply is made by the State or local municipality, and is not mandated by EPA or any other Federal entity.” – USEPA Website

JUST ADD WATER
A Recipe For Life

Gray & Osborne, Inc.
CONSULTING ENGINEERS

Outline of Presentation

- Background – Regulatory/Safety
- Fluoride Options
  - Sodium Fluoride - NaF
  - Sodium Silicofluoride - Na_2SiF_6
  - Fluorosilicic Acid - H_2SiF_6
- Fluoride Monitoring
- Lessons Learned

JUST ADD WATER
A Recipe For Life

Gray & Osborne, Inc.
CONSULTING ENGINEERS

Regulatory Concerns

- Fluoride is a primary inorganic contaminant – MCL=4.0 mg/L as F^-.
- Fluoride is also a secondary inorganic contaminant – MCL=2.0 mg/L as F^-.
- Fluoride addition in drinking water is usually about 1.0 mg/L. If fluoridating, WA Dept. of Health requires fluoride level between 0.8 and 1.3 mg/L as F^-.

JUST ADD WATER
A Recipe For Life

Gray & Osborne, Inc.
CONSULTING ENGINEERS

Building and Safety Concerns

- Fluoride Compounds Above Exempt Amounts Require H4 Occupancy (IBC, IFC, IMC)
  - Placarding
  - Ventilation for Corrosives
  - Secondary Containment
  - Auxiliary Power if Ventilation is Required
  - Liquid-Tight, Non-Combustible Floor
  - Automatic Sprinkler

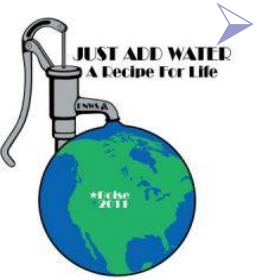

Gray & Osborne, Inc.
CONSULTING ENGINEERS

Fluoride Chemical Options

- Three basic fluoride options are used.
  - NaF (Sodium Fluoride, Sodium Monofluoride, Sodium Hydrofluoride, Fluoridine)
  - Na_2SiF_6 (Sodium Silicofluoride, Sodium Silico Fluoride, Disodium Hexafluorosilicate)
  - H_2SiF_6 (Fluorosilicic Acid, Fluosilicic Acid, Hydrofluorosilic Acid, Silicofluoride, Silicofluoric Acid, Dihydrogen Hexafluorosilicate, Hexafluorosilicic Acid)

Sodium Fluoride - NaF

- Simplest Option
- NaF Powder or Crystals– Delivered as 50 lb Bags
- Only ~4% Concentration by Weight at Saturation
- Applicable for Small Systems

JUST ADD WATER
A Recipe For Life

Gray & Osborne, Inc.
CONSULTING ENGINEERS

NaF Safety

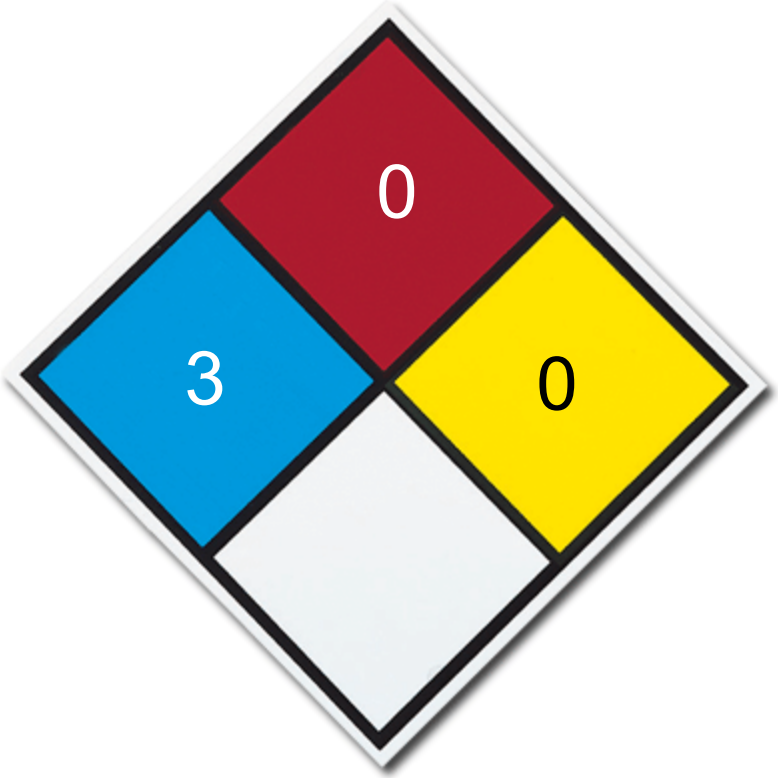

- Health Hazard – Toxic
- Not Corrosive
- Not Reactive
- Not Flammable
- Exempt Amount = 500 lbs. or H4 Occupancy

JUST ADD WATER
A Recipe For Life

Gray & Osborne, Inc.
CONSULTING ENGINEERS

Saturators Are Usually Used

- Commercially Available Package Units
- Excess NaF Granules in Bottom of Container
- Automatic Filling of Water
- Chemical Feed of Saturated Solution

Source: LMI Inc.

JUST ADD WATER
A Recipe For Life

Gray & Osborne, Inc.
CONSULTING ENGINEERS

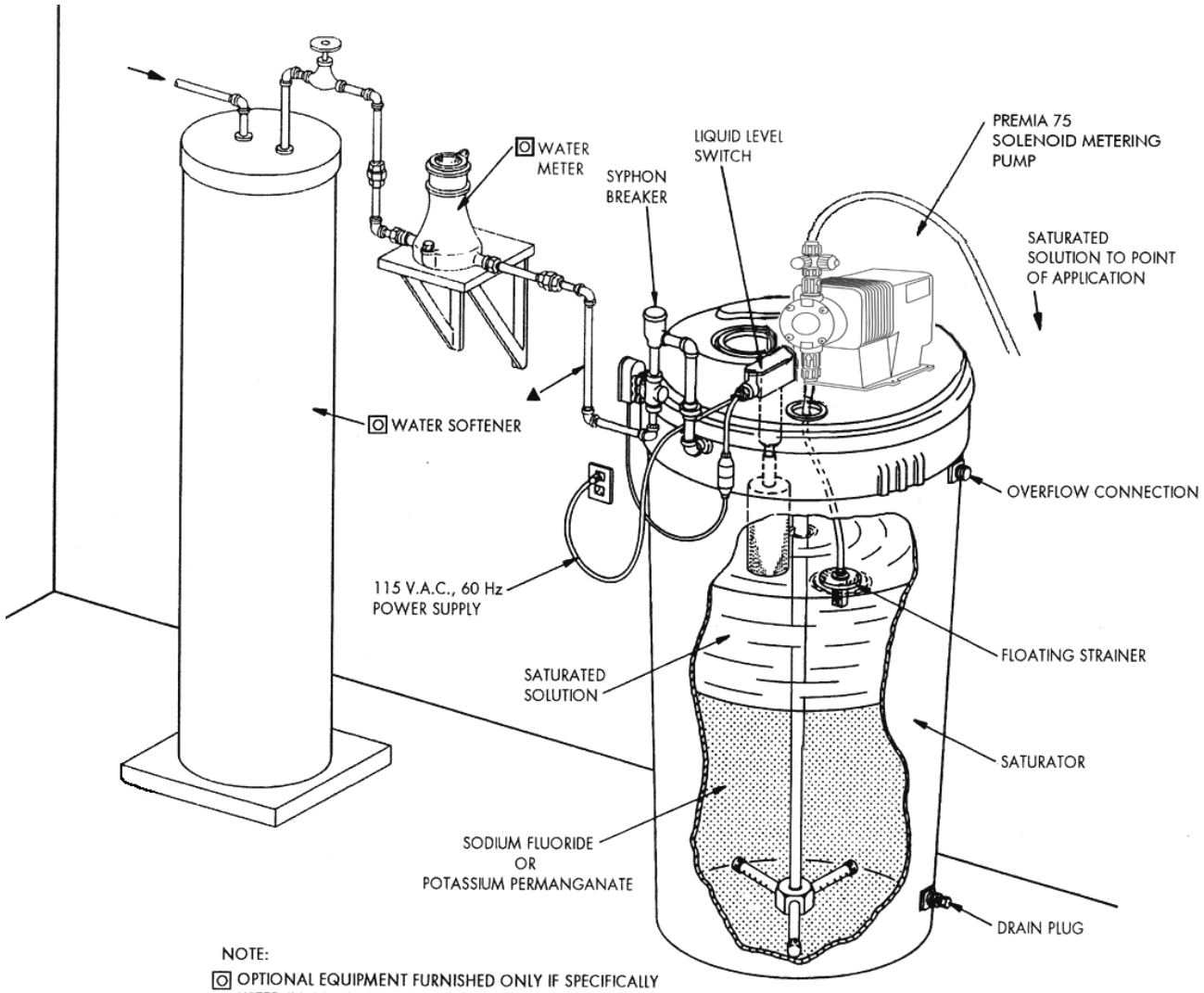

NOTE:

OPTIONAL EQUIPMENT FURNISHED ONLY IF SPECIFICALLY LISTED IN QUOTATION AND AS CHECKED ON THIS DRAWING.

▲ RIGID PIPING SHOULD BE USED FROM THE WATER METER TO THE SATURATOR SOLENOID VALVE.

Source: Siemens Water Technologies

Gray & Osborne, Inc.
CONSULTING ENGINEERS

Typical Installation

JUST ADD WATER
A Recipe For Life

Sodium Silicofluoride – Na_2SiF_6

- Powder
- Available in 50 pound and 1,000 pound sacks
- Usually Used in Medium to Large Systems > 4 MGD

JUST ADD WATER
A Recipe For Life

Gray & Osborne, Inc.
CONSULTING ENGINEERS

Na_2SiF_6 Safety

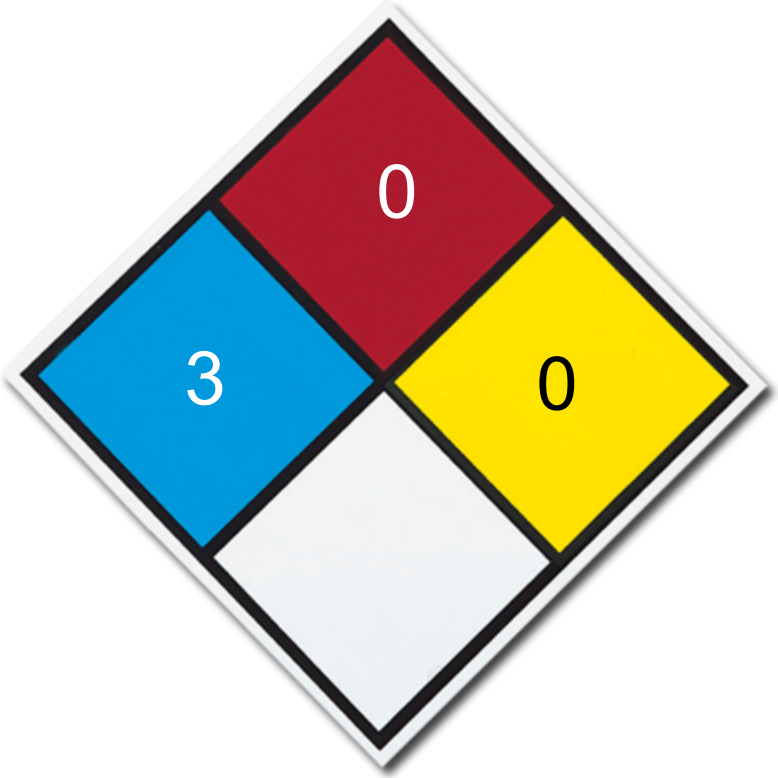

- Health Hazard – Toxic
- Not Corrosive
- Not Flammable
- Not Reactive
- Exempt Amount = 500 lbs. or H4 Occupancy

JUST ADD WATER
A Recipe For Life

Gray & Osborne, Inc.
CONSULTING ENGINEERS

Sodium Silicofluoride Dry Feed System

- Dry Chemical Hopper
- Metered Feed – Usually Screw Feed
- Solution Tank – Water Level Controls
- Chemical Feed From Solution Tank

Sodium Silicofluoride – Na_2SiF_6

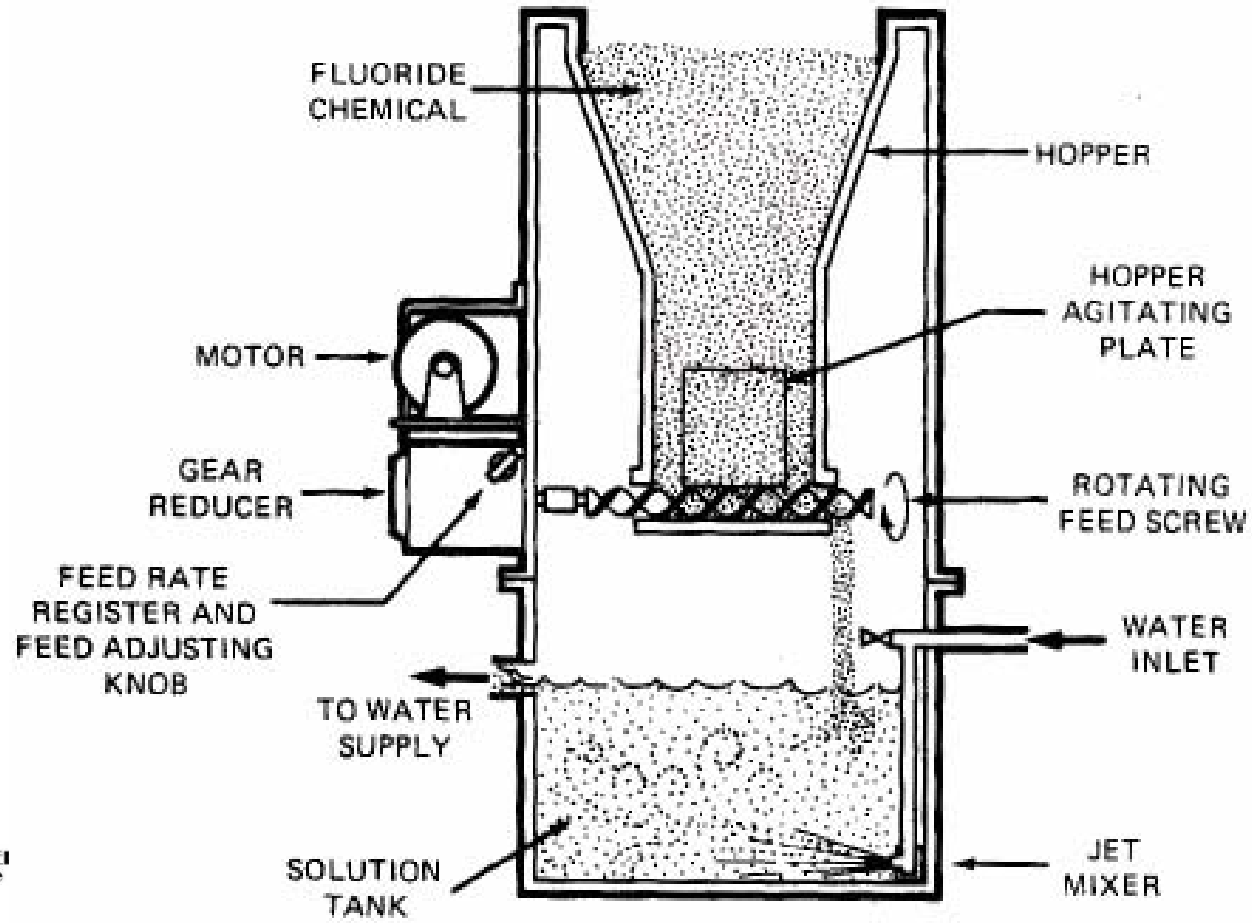

Source: *Water Fluoridation* by Glenn Tillman

Gray & Osborne, Inc.
CONSULTING ENGINEERS

Example Dry Feeder

Source: USI, LLC

JUST ADD WATER
A Recipe For Life

Gray & Osborne, Inc.
CONSULTING ENGINEERS

Super Sack Bulk Feeders

Source: Flexicon, Inc.

JUST ADD WATER
A Recipe For Life

Gray & Osborne, Inc.
CONSULTING ENGINEERS

Fluorosilicic Acid – H_2SiF_6

- Liquid
- Carboys, 50 gal Drums, Bulk Delivery
- 23% Solution
- Trades Powder Handling for Corrosive Liquid

JUST ADD WATER
A Recipe For Life

Gray & Osborne, Inc.
CONSULTING ENGINEERS

H_2SiF_6 Safety

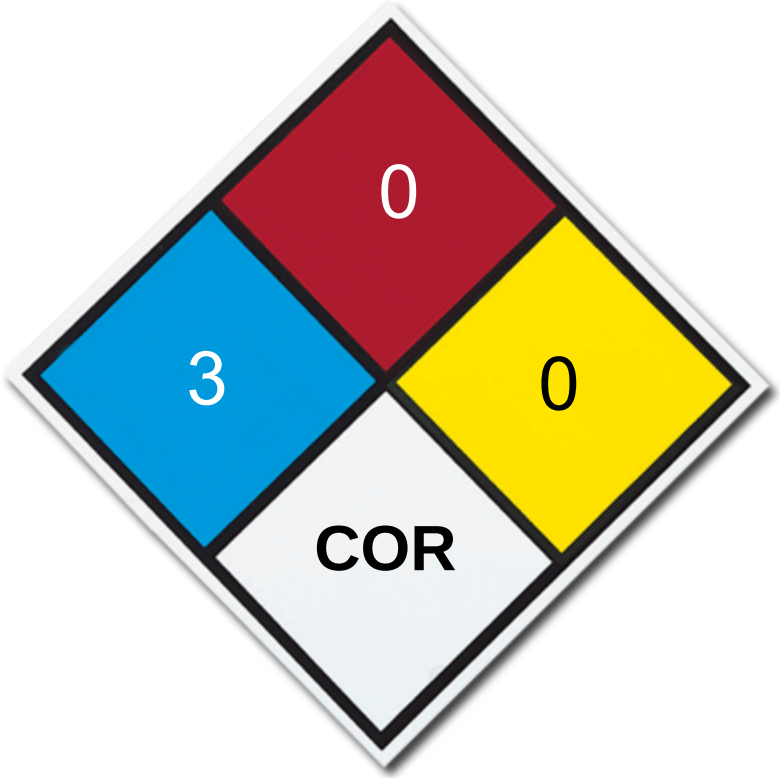

- Health Hazard – Toxic
- Health Hazard – Corrosive
- Not Flammable
- Not Reactive
- Exempt Amount = 50 gallons or H4 Occupancy

JUST ADD WATER
A Recipe For Life

Gray & Osborne, Inc.
CONSULTING ENGINEERS

Simple Equipment

- Bulk Tank or Barrel
- Chemical Feed Pumps
- Ancillary Equipment for Safety – Fill Piping, Vent to Atmosphere Piping, etc.
- Separate Storage Room

JUST ADD WATER
A Recipe For Life

Gray & Osborne, Inc.
CONSULTING ENGINEERS

Vent piping to outside

Fill pipe from outside fill port

Overfill strobe/alarm

Leak detector alarm

Double-wall tank

Placard

Seismic flexible fitting

Seismic hold-down

H_2SiF_6 Storage Tank Features

JUST ADD WATER
A Recipe For Life

Gray & Osborne, Inc.
CONSULTING ENGINEERS

F^- Monitoring

- Verifies correct chemical feed operation and provides high/low alarm.
- Alarm on high F^- level prevents overfeed to customers – may be required by regulatory agency.

F^- Monitoring Options

Source: Hach Corporation

Reagent Based

Source: Prominent Corporation

Flow-through Non-reagent Based

JUST ADD WATER
A Recipe For Life

Gray & Osborne, Inc.
CONSULTING ENGINEERS

Lessons Learned – NaF Dust Control

Dust can be an issue during sodium fluoride addition.

Dust control units can be used.

Lessons Learned – NaF Dust Control

Source: Donaldson Company, Inc.

Dust units can have filters to capture particles.

JUST ADD WATER
A Recipe For Life

Gray & Osborne, Inc.
CONSULTING ENGINEERS

Lessons Learned – Fluoride chemicals can be hard on chemical feed piping especially fluorosilicic acid.

- Leaky joints
- Glued fittings generally better than threaded
- Chemically resistant glues

Lesson Learned – Chemical Feed Lines

Source: St. Gobain

Great Idea! – Single piece of Teflon tubing with stainless steel jacket.
One piece from chemical feed pump to injection – eliminates joints.
High pressure application.

JUST ADD WATER
A Recipe For Life

Gray & Osborne, Inc.
CONSULTING ENGINEERS

Lesson Learned – Chemical Feed Lines

Source: St. Gobain

High pressure, threaded connections - stainless steel

H_2SiF_6 corrosive to stainless steel.

Leaks at both threaded connections.

GREEN OOZE!

Okay – not such a good idea.

JUST ADD WATER
A Recipe For Life

Gray & Osborne, Inc.
CONSULTING ENGINEERS

Lessons Learned – H_2SiF_6 Venting and Corrosivity

H_2SiF_6 can create fumes and coat surfaces with powdery residue.

JUST ADD WATER
A Recipe For Life

Gray & Osborne, Inc.
CONSULTING ENGINEERS

Lessons Learned – H_2SiF_6 Venting and Corrosivity

Protect Electrical Equipment such as VFDs.

JUST ADD WATER
A Recipe For Life

Gray & Osborne, Inc.
CONSULTING ENGINEERS

Questions?

Russ Porter, P.E.
Gray & Osborne, Inc.
Seattle, WA
rporter@g-o.com
(206) 284-0860

JUST ADD WATER
A Recipe For Life

Gray & Osborne, Inc.
CONSULTING ENGINEERS