Chemical Feed Systems

Troubleshooting & Lessons Learned

Eric Landsberg, P.E.

SPF Water Engineering

PNWS AWWA Annual Conference, Boise, ID

May 4, 2011

www.spfwater.com

SPF WATER ENGINEERING

Chemical Feeds Systems Come in All Shapes and Sizes

- Focus on Liquid Chemical Feed
- Cover basic system components and operation
- Troubleshooting & Lessons Learned

SPF WATER ENGINEERING

Chemical Feed System Goals

- Deliver accurate dose of chemical
- Reliable & Safe
- Minimal operations and maintenance time/effort/expense

SPF WATER ENGINEERING

Components of a Chemical Feed System

Storage

Pumping

Delivery/
Injection

Storage Tank Considerations

- Capacity
- Material
- Containment
- Options & Accessories

SPF WATER ENGINEERING

Sizing Storage Tanks

- Days Storage
  - 15 days minimum
  - 30+ days if practical
- Adequate for accepting delivery
- Too much storage is not necessarily a good thing
- Redundancy if possible

SPF WATER ENGINEERING

Tank Sizing Example

McCain Foods Public Water System Burley, ID

Chlorine Feed System w/12.5% Sodium Hypochlorite

Peak Day = 8 mgd

Average Dose = 4 mg/L

Usage = 8.34 x 8 mgd x 4 mg/L = 270 ppd Chlorine

1 gal 12.5% NaOCl = 1 lb avail Cl_2

Feed Rate = 270 gpd

15 days storage = 4000 gal

30 days storage = 8000 gal

PROVIDED TWO 6,000 GAL TANKS

Two 6,000 gal Tanks in Burley, ID

SPF WATER ENGINEERING

Tank Materials

Material compatible with chemical

- HDPE (linear)
- HDXLPE (cross linked)
- Stainless Steel
- Fiberglass Reinforced Plastic (FRP)

SPF WATER ENGINEERING

Containment Must be Provided for Hazardous Chemicals

- Knee Wall
- Recessed Floor
- Containment Pallets
- Provide non-slip floor in polymer containment areas

SPF WATER ENGINEERING

Storage Tank Accessories

- Sight Tube for Reading Level
- Overflow
  - Provide air lock if vapors are an issue)
  - Visible from fill station if possible
- Drain and vent
- Flexible connections (especially for plastic tanks)
- Access for large tanks
- Electronic level sensors
- Containment
- Heat Tracing and Insulation

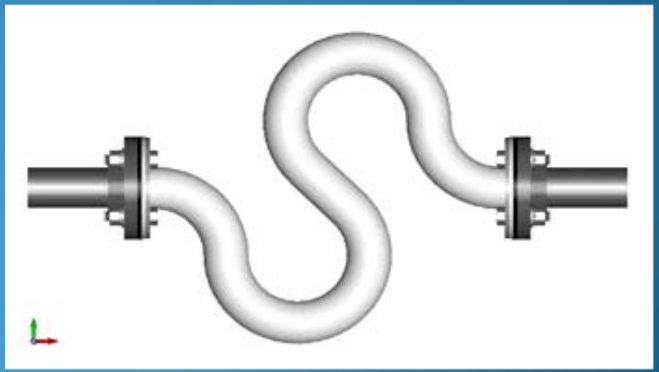

SPF WATER ENGINEERING

Chemical Metering Pumps

Peristaltic Pump

Hose Pump

Diaphragm Pumps

SPF WATER ENGINEERING

Peristaltic Pumps

- Rollers move fluid through flexible tubing
- Simple
- No mechanical wetted parts
- Move tubing monthly
- Replace tubing annually

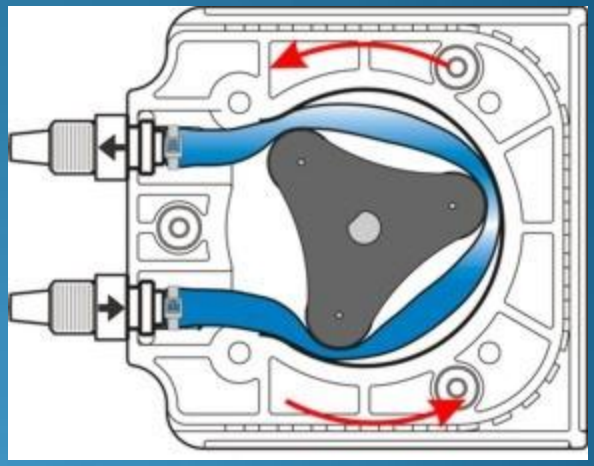

SPF WATER ENGINEERING

Peristaltic Pump

SPF WATER ENGINEERING

Features of Peristaltic Pumps

- Different tubing sizes for different flow rates
- Different tubing materials for chemical compatibility
- Variable speed drives with wide turndown ranges (1:10,000)
- Can be flow paced

SPF WATER ENGINEERING

Diaphragm Pumps

- Still most common type of chemical metering pump
- Can require significant maintenance
- Can create large pressure pulses
- May be most cost effective for smaller applications

SPF WATER ENGINEERING

Simple Chlorine
Feed System using
5% bleach

Accessories for Diaphragm Pumps

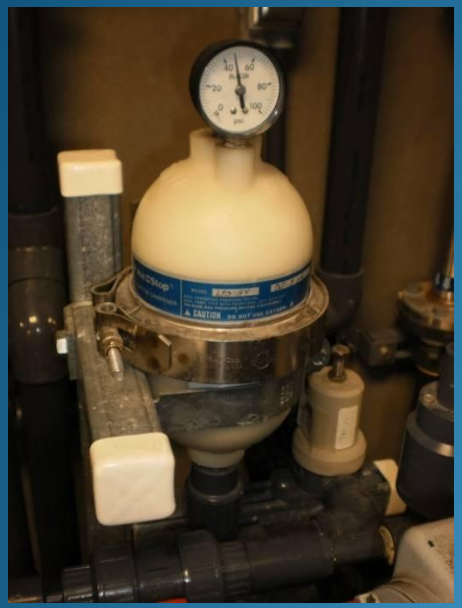

Pulsation Dampener

Pressure Relief Valve

SPF WATER ENGINEERING

Hose Pumps

- High Pressure
- High Flow Rates
- Can Handle slurries and sludges

SPF WATER ENGINEERING

Accessories for Chemical Feed Systems

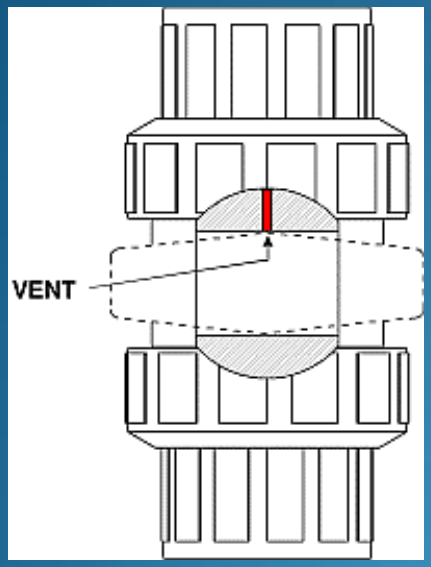

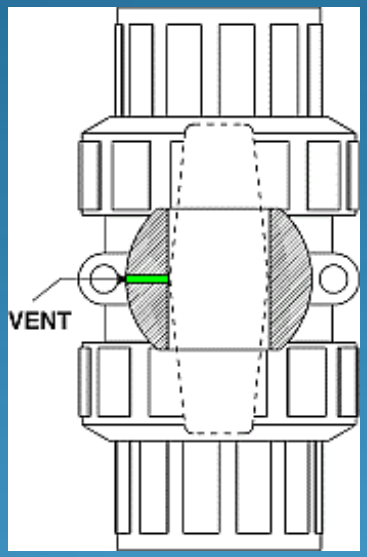

Vented Ball Valves for Sodium Hypochlorite Service

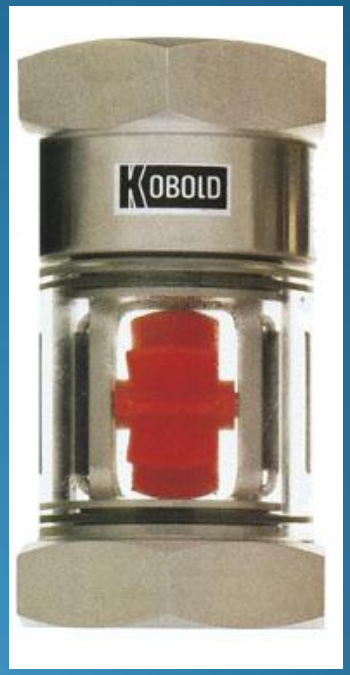

Visual Flow Indicator

SPF WATER ENGINEERING

Calibration Columns are Essential for Measuring Feed Rate

SPF WATER ENGINEERING

Use Calibration Column to Measure Feed Rate

www.spfwater.com

SPF WATER ENGINEERING

Chemical Dose Calibration Example

Chemical: Alum 350,000 mg/L

Feed Rate: 1 gal in 10 min = 0.1 gpm

Water Flow Rate: 1000 gal/min

Determine Chemical Dose

Concentration x Flow = Concentration x Flow

350,000 mg/L x 0.1 gpm = X mg/L x 1000 gpm

X = 35 mg/L

SPF WATER ENGINEERING

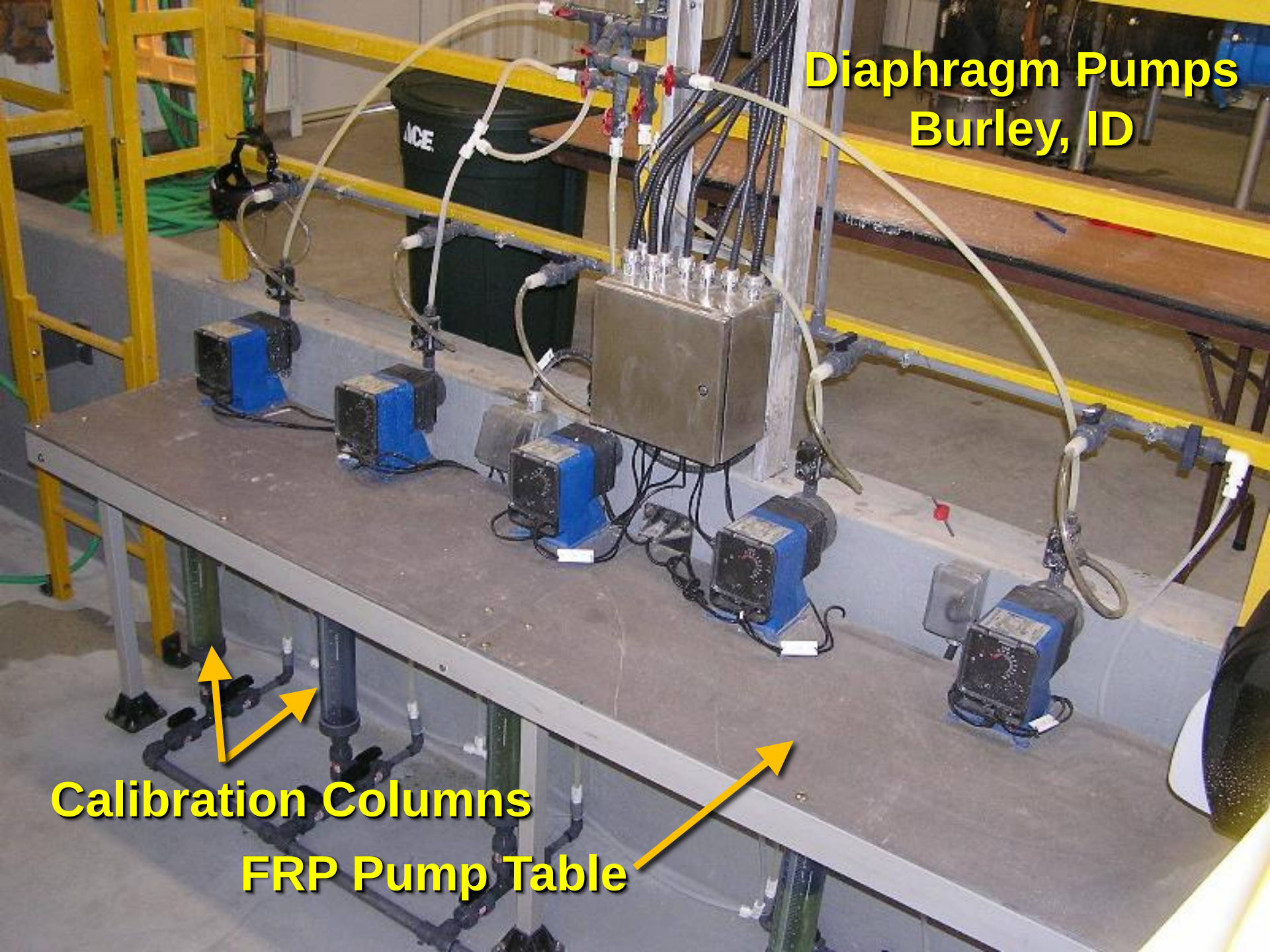
Diaphragm Pumps
Burley, ID
Calibration Columns
FRP Pump Table

There are Many Types of Chemicals Used for Water Treatment

Disinfectants

- Chlorine Gas
- Sodium Hypochlorite (12%)
- On-Site Gen Bleach (0.8%)
- Ozone
- Chlorine Dioxide

Coagulants

- Aluminum Sulfate (alum)
- Ferric Chloride
- Ferric Sulfate
- Coagulant Polymers

Polymers

- Coagulant Aid (Cationic)
- Flocculant Aid (Anionic)
- Filter Aid (Nonionic)

Polyphosphate and Orthophosphate

Powdered Activated Carbon

Hydrofluorosilicic Acid

Potassium Permanganate

Sulfuric Acid

Sodium Hydroxide

Carbon Dioxide

SPF WATER ENGINEERING

Lessons Learned with Chemical Feed Systems

- Consider peristaltic pumps
- Provide redundancy when possible
- Metering pumps should fail to zero (off)
- Consider coagulant polymers instead of alum or ferric
- When in doubt check the feed rate with a calibration column

SPF WATER ENGINEERING

www.spfwater.com

On-Site Generation

- Higher Capital Cost
- Lower O&M Cost
- Safe & Reliable

- Generates 0.8% bleach
- Consumes salt and power
- Can reduce chlorine cost for medium and large systems

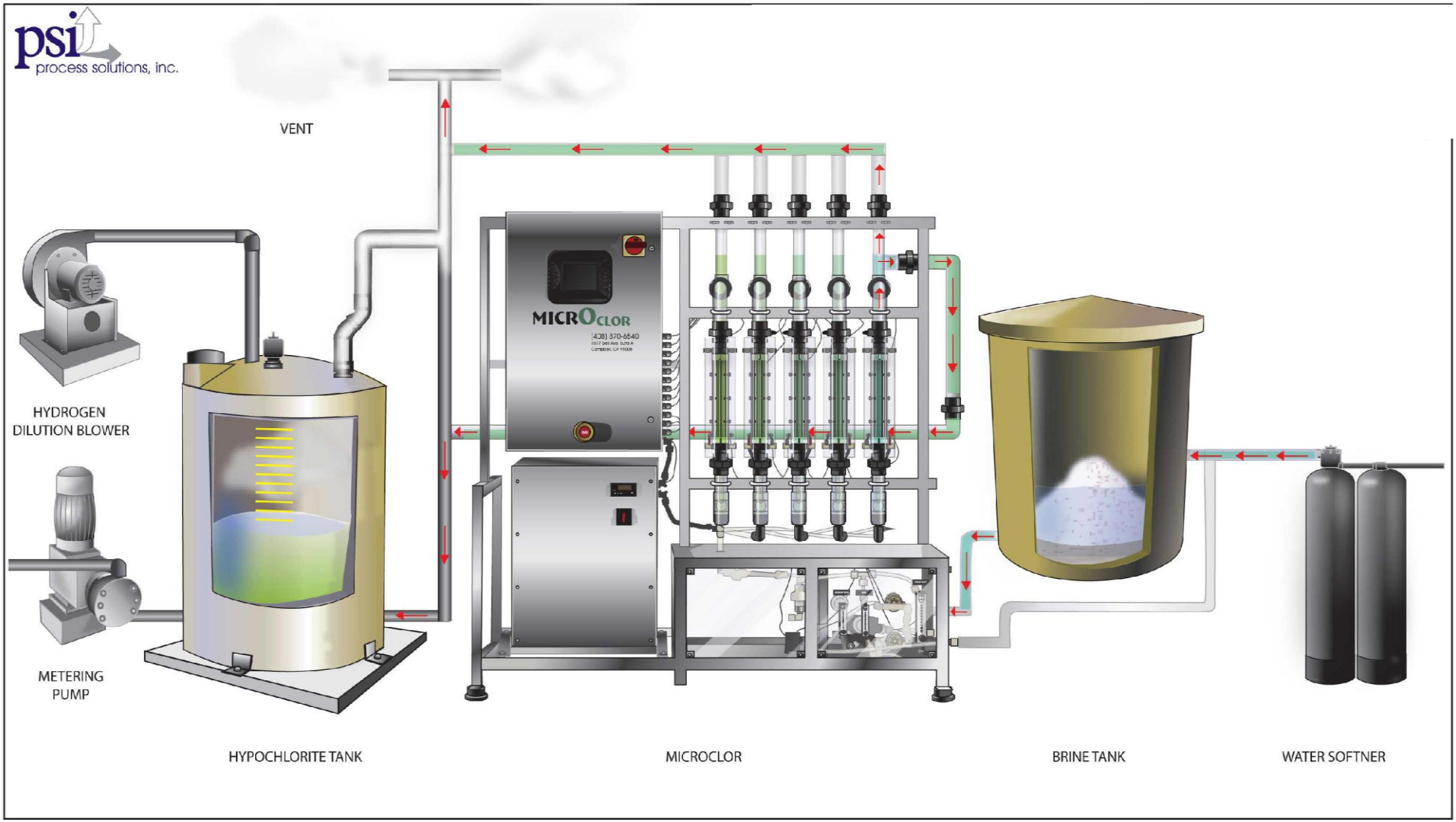
psi
process solutions, inc.
VENT
HYDROGEN
DILUTION BLOWER
METERING
PUMP
MICROCLOR
(408) 370-6540
HYPOCHLORITE TANK
MICROCLOR
BRINE TANK
WATER SOFTNER

Example Cost Comparison between On-Site Generation and Liquid

Average Water Production = 4 mgd

Average Chlorine Dose = 3 mg/L

What is ave chlorine usage in lbs/day?

PPD Chlorine = 4 x 3 x 8.34 = <u>100 lbs/day</u>

What is chlorine usage in lbs/yr?

PPY Chlorine = 100 ppd x 365 = <u>36,500 lbs/yr</u>

Useful formula: ppd chlorine = water production (mgd) x dose (mg/L) x 8.34

Cost Comparison (cont.)

Cost of 12% bleach = $2.50/gallon (1 gal = 1 lb chlorine)

= <u>$2.50/lb</u>

Cost of generating chlorine on site

1 lb chlorine requires 2 kWh electricity and 3 lbs salt

Assume power cost $0.08/kWh and salt costs $120/ton or $0.06/lb

What is cost of generating 1 lb chlorine on site?

Cost = (2 x $0.08) + (3 x $0.06) = <u>$0.34/lb</u>

Cost Comparison (cont.)

What is annual cost of chlorine?

for 12% liquid = 36,500 ppy x $2.50/lb = $91,250/yr

for On-site gen = 36,500 ppy x $0.34/lb = $12,410/yr

What is the annual savings with on-site = <u>$78,840</u>

If the on-site generation system costs $120,000, what is the payback period in years?

<u>1.5 years</u>

300 ppd On-Site Generation System

www.spfwater.com

SPF WATER ENGINEERING