2011 PNWS-AWWA Annual Conference
Boise, Idaho

pH Control

Bruce Dudzik, P.E.
HDR Engineering, Inc.
Pasco, WA

May 4, 2011

pH Control in Water Systems

- Corrosion control (Ryznar or Langelier Index)
- Offset other chemical feeds
- High or low initial pH requiring adjustment

For water systems, pH control is based on either an acid or base adjustment.

Objectives

- Definition of pH
- Acid/Base Titration Curve
- Control Algorithms
- Chemicals for pH Control
- Vessel Geometry
- In-Line pH Sensors

Definition of pH

$$pH = -\log [H^+]$$

where $[H^+]$ = Concentration in moles/L

Remember that for pure water:

$$K_w = [H^+]\,[OH^-] = 10^{-14}$$

Acid-Base Titration Curve

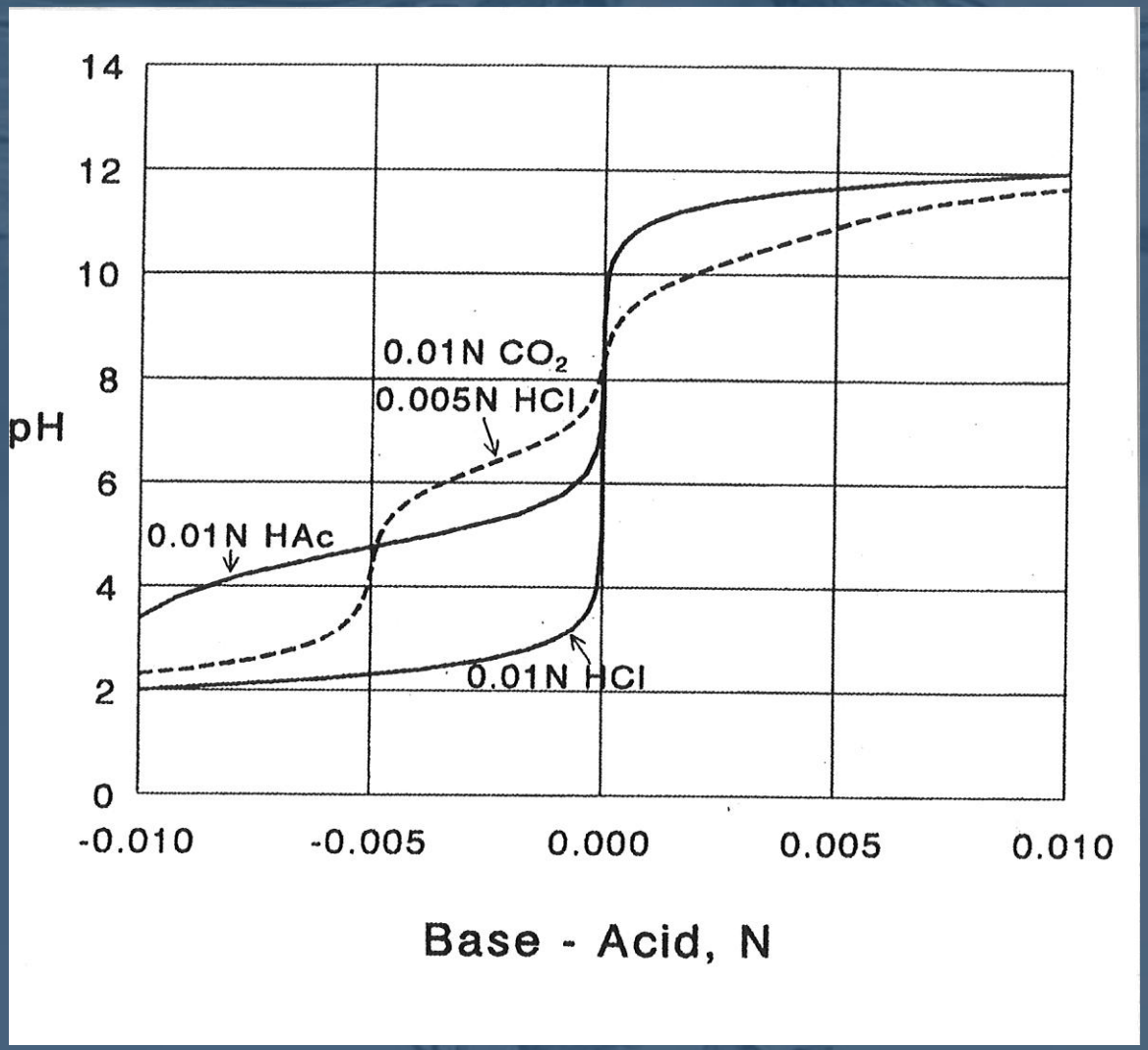

Acid-Base Titration Curve

Titration Curve tells us:

- pH vs. chemical feed is non-linear
- Slope of pH/(Chemical feed) at pH=7 is ∞

Buffered solution is one that resists change in pH this is related to salts of weak acids/bases (CO_2 & HAc – Acetic Acid)

General Issues for pH Control

- Feedback control for unbuffered water is difficult within 5-9 pH range
- Feed-Forward control implemented by:
  1. Titrating individual stream(s)
  2. Developing a model based on the data
- Feed-Forward with biased Feedback Control uses Feedback loop to handle “blips”.

Control Algorithms

Basic control algorithms:

- Feed-Forward
- Feedback
- Feed-Forward & Feedback Control
- Feed-Forward Flow Proportional (non pH)

Feed-Forward Control Loop Schematic

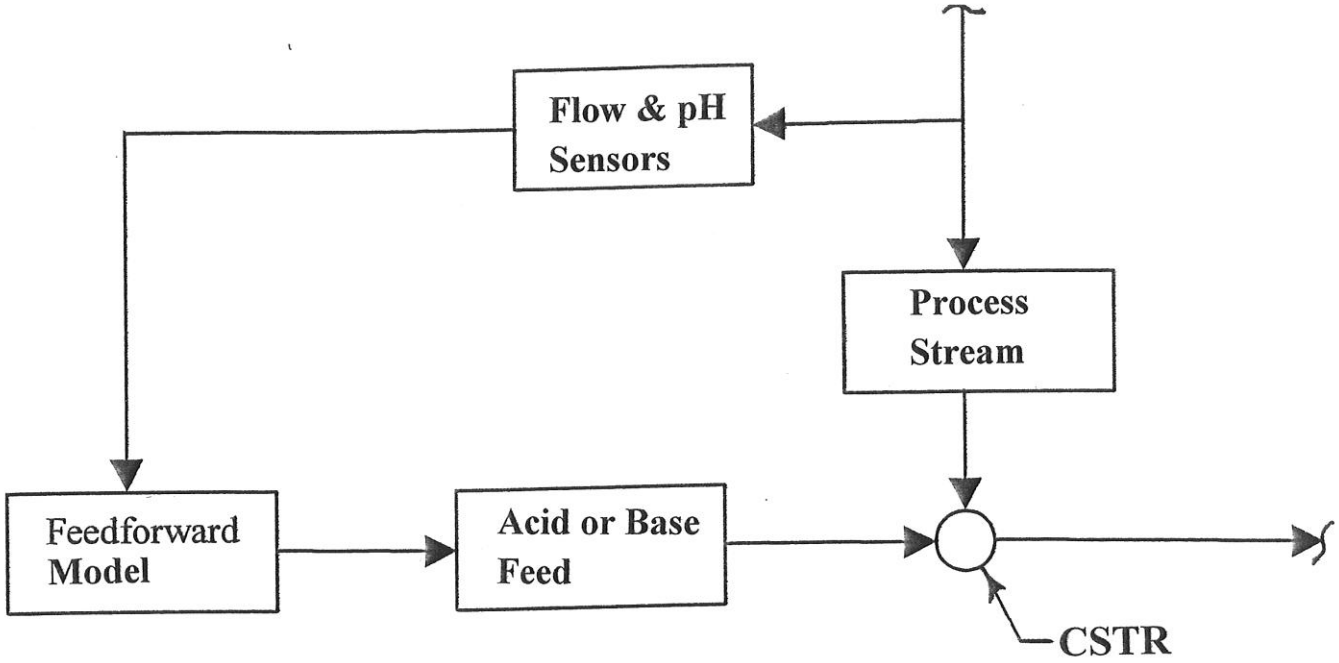

Feed-Forward Control

- Feed-Forward control uses a mathematical model of the measured variable with respect to the desired control action.
- Its usefulness is based on the accuracy of the mathematical model used.
- Stable control algorithm that is not subject to overshoot, need for adaptive control, etc.

Feedback Control Loop Schematic

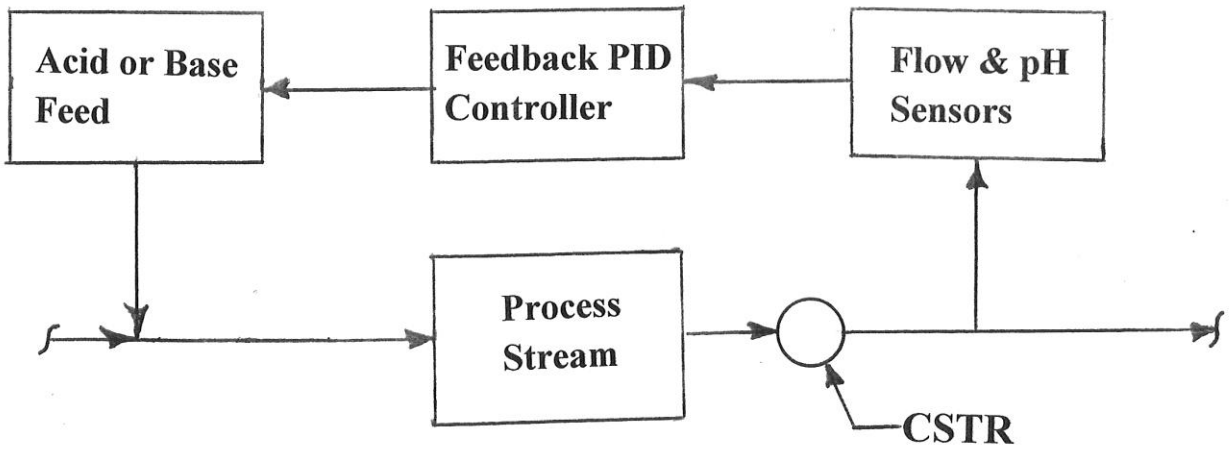

Feedback Control

- Feedback control:
  - Compares measured variable to set point
  - Calculates an error signal
  - Sets control action through a PID controller (P=Proportional, I=Integral and D=Differential)
- Feedback control can be an inherently unstable system (more later).
- Feedback control requires careful tuning and for pH control this involves tuning a PID controller.

Proportional to Flow

- Simple Feed-Forward system:
  - For streams with relatively constant pH but vary in flow rate
  - Simplest control algorithm would be to use a Feed-Forward flow proportional model in which chemical feed is based on a titrated sample combined with varying flow rate signal from a flow meter.

Matching Process to Output Devices

- pH is a non-linear function
- Consider the output device characteristics in relation to the desired control objectives.
- Assuming that the normal range for control is 30-70%, the Equal Percentage Globe Valve offers the potential for the least amount of controller overshooting

I/O Curves for Various Valve Types

Characteristic curves for several types of valves (Note: metering pumps behave like linear globe valves).

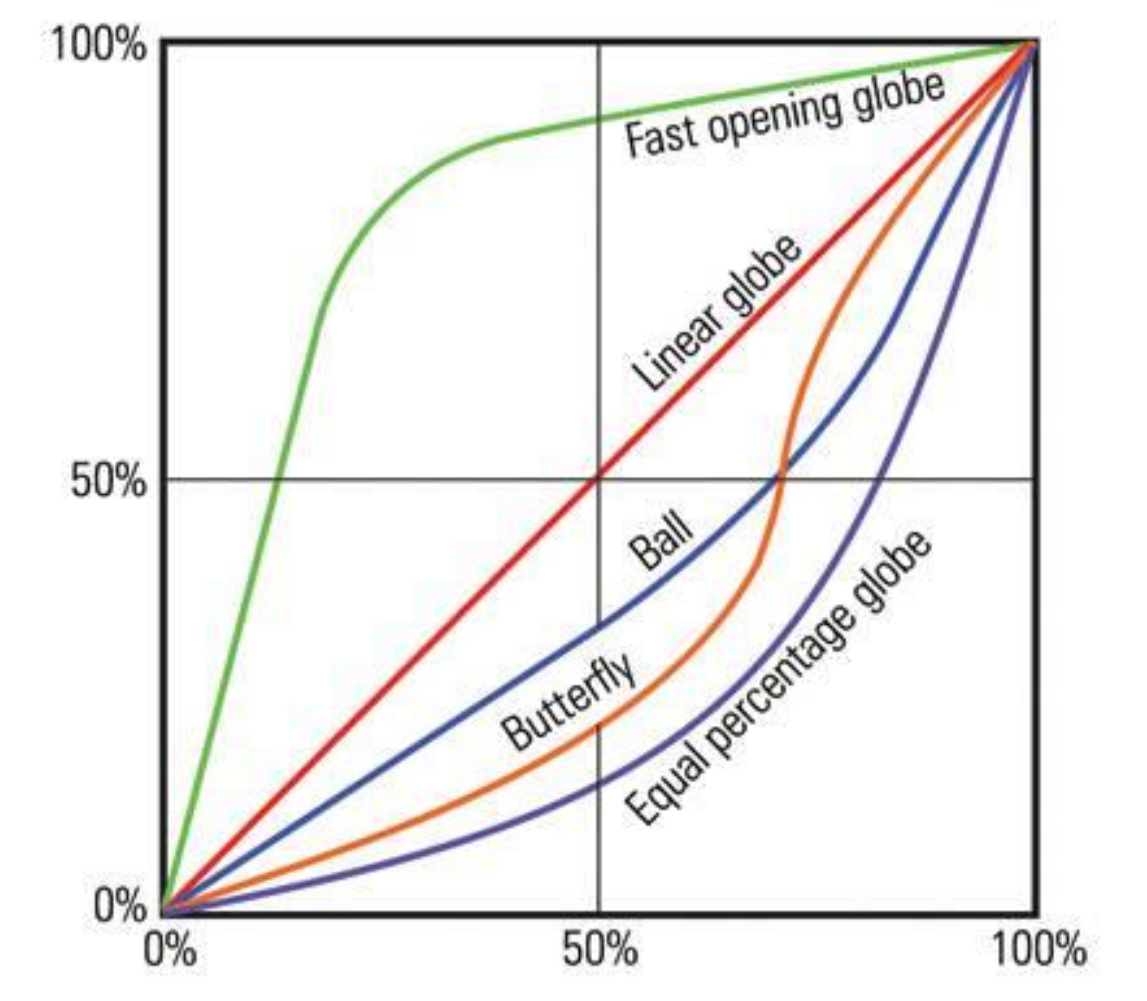

Feedback Loop Responses

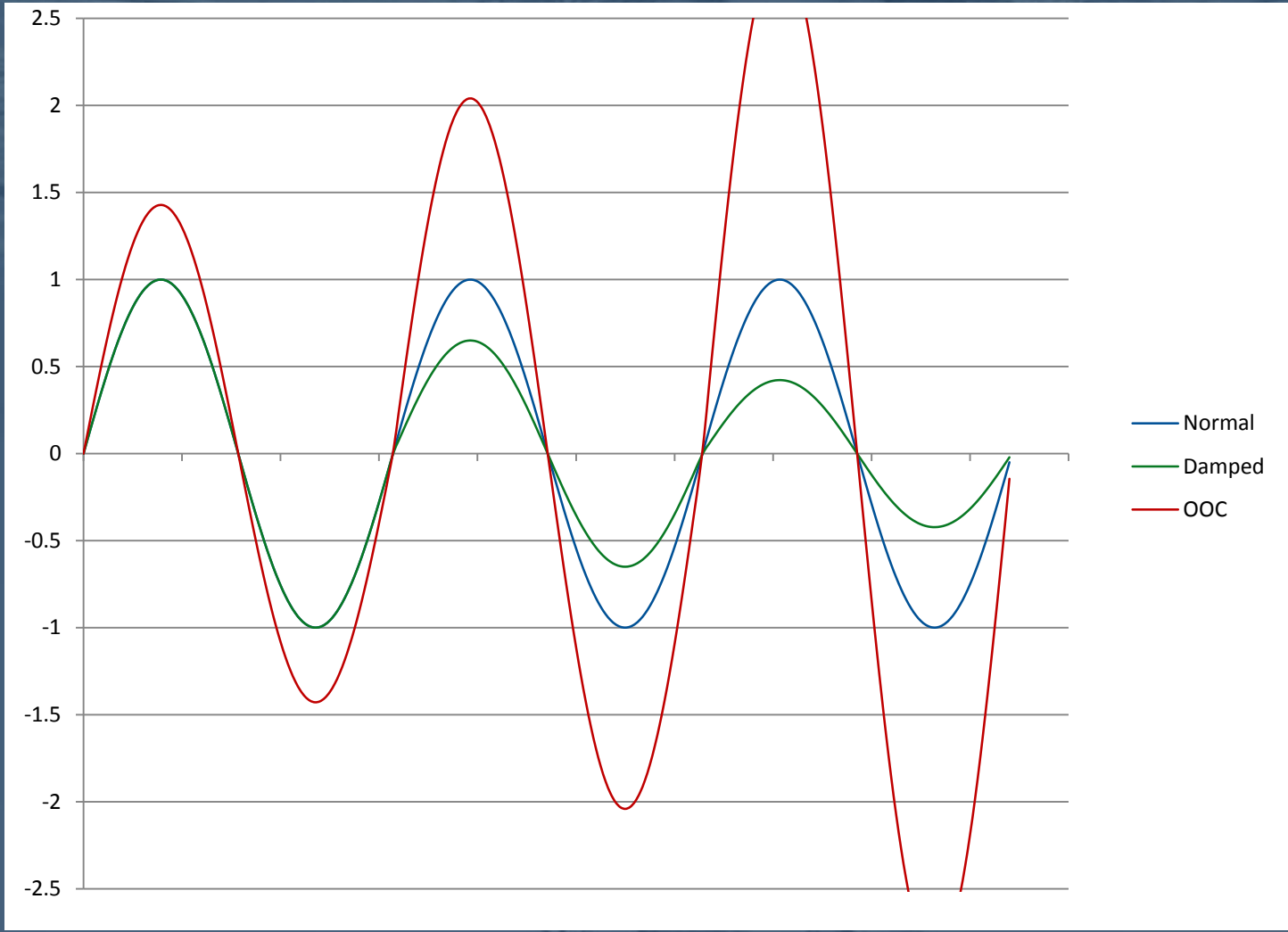

Commercial Chemicals Used for Neutralization

Chemical	Chemical Formula	Molecular Weight	Equivalent Weight	Commercial Product[1]	$CaCO_3$ Dosage mg/L[2]
To Neutralize Acidic Wastes					
Caustic Soda	$NaOH$	40.0	40.0	50% Solution	1.25
Magnesium Hydroxide	$Mg(OH)_2$	58.33	29.17	60% Slurry	1.72
Potassium Hydroxide	KOH	56.11	56.11	45% Solution	0.89
High Calcium Quicklime	CaO	56.0	56.0	92% Solid	0.89
Hydrated Lime	$Ca(OH)_2$	74.1	37.05	92% Solid	1.35
Sodium Carbonate	Na_2CO_3	106.0	53.0	98% Solid	0.94
Sodium Bicarbonate	$NaHCO_3$	84.0	84.0	98% Solid	0.60
Calcium Carbonate[3]	$CaCO_3$	100.0	50.0	N/A	1.00
To Neutralize Caustic Wastes					
Sulfuric Acid	H_2SO_4	98.08	49.04	100%	2.00[4]
Hydrochloric Acid	HCl	36.46	36.46	40% Solution	1.00[4]

[1] All percentages are "by weight". Caustic Soda and Potassium Hydroxide are supplied as liquids and delivered in up to 48,000# Over-the-Road (OTR) shipments by tank trucks. Magnesium Hydroxide is supplied as a slurry and delivered in up to 48,000# Over-the-Road (OTR) shipments by tank trucks. High Calcium Quicklime, Hydrated Lime, Sodium Carbonate and Sodium Bicarbonate are solids and are delivered by 34-Ton OTR Hopper Trucks.

[2] Values are mg/L of $CaCO_3$ added by 1 mg/L dose of chemical.

[3] Values shown are for purposes of helping to show the stoichiometric relationships associated with columns 3, 4, and 6 of the table. Commercial pricing and delivery of calcium carbonate is the same situation as that described in Footnote 3 above regarding sodium carbonate and sodium bicarbonate.

[4] Values are mg/L of H^+ ion added per mg/L of chemical.

Ideal Vessel Geometry

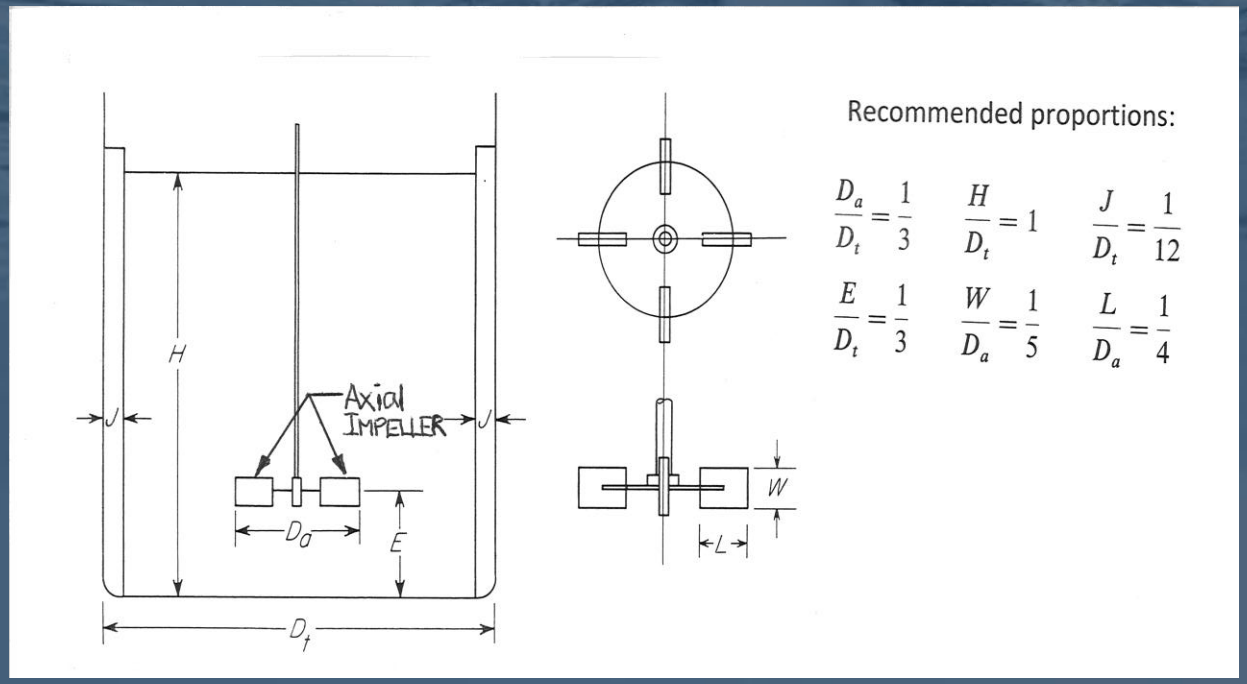

Cylindrical Tank with 4 Baffles:
CSTR with $c_{out} = c_{tank}$

Detention Times & Deadtime

Type of Chemical Feed	Vessel Detention Time - min
Liquids (H_2SO_4, NaOH, etc)	1
Slurries	10-15
Solids	15

This is one area where adding additional detention time is not a good idea when using Feedback Control.

Vessel deadtime (τ_d) = $V/(F_a+F)$ and this should be kept to a minimum.

pH Sensors

Use differential electrode type sensors – do not use sampled systems as they unnecessarily add deadtime to a control loop!

pH sensors, like other process instrumentation, require periodic calibration and standardization.

Questions?