BUILDING A WORLD OF DIFFERENCE

2011 PNWS AWWA
Boise, ID May 4, 2011

Achieving Manganese Removal at an MF/UF Plant Requires Proper Pretreatment and Raw Water Quality Monitoring

Benjamin Klayman, Michelle Cheek, Ray Pardee*

*(City of Cottage Grove)

City of Cottage Grove Oregon

BLACK & VEATCH
Building a world of difference.

COTTAGE GROVE, OR

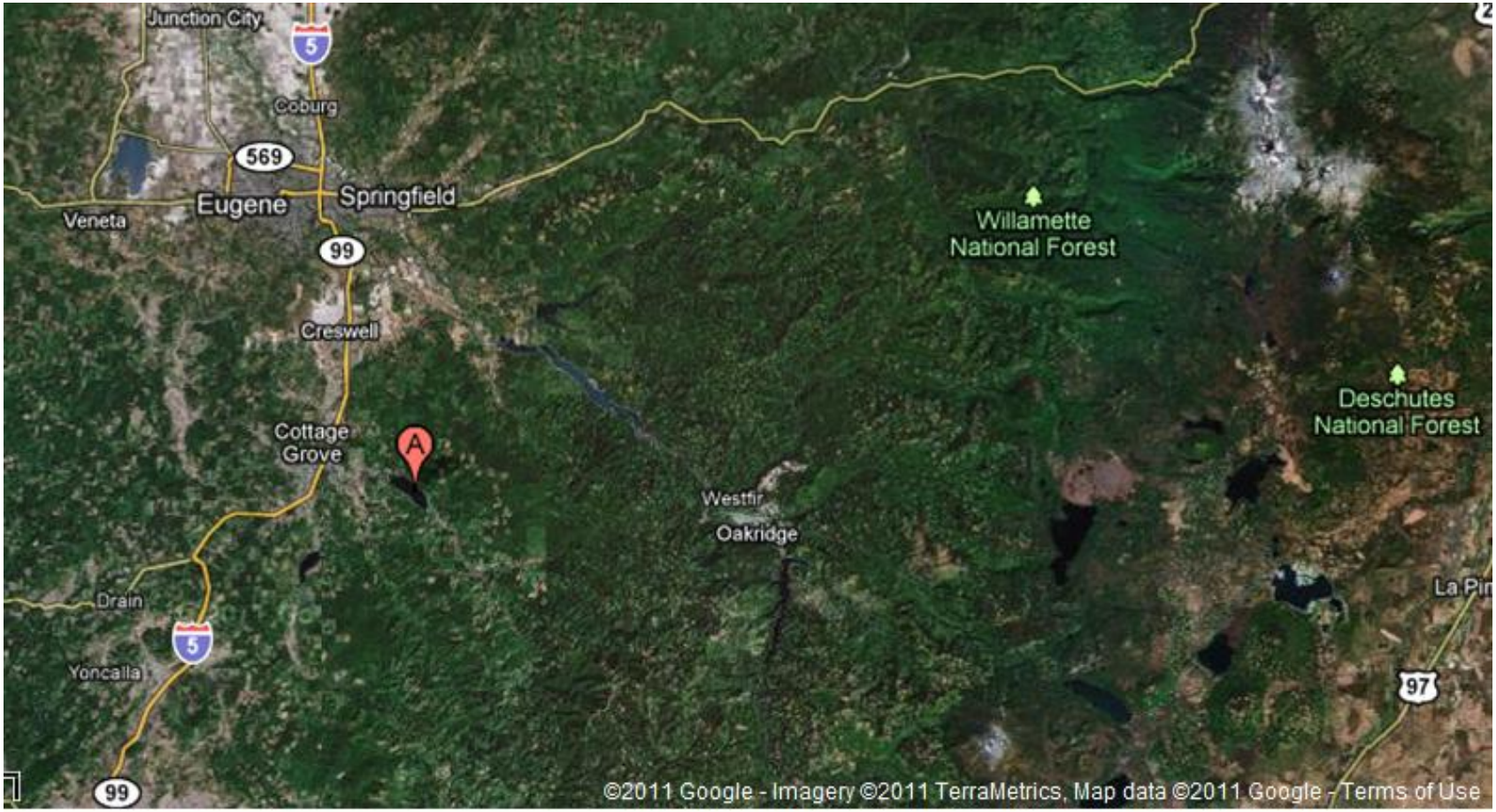

Klayman, Cheek, Pardee (2011), PNWS AWWA, Boise, ID

OUTLINE

- **Background**
  - Oxidation chemistry
  - Oxidants used for Mn removal
  - Membranes vs granular media
- **City of Cottage Grove**
  - Water quality
  - Jar testing
  - Full-scale solution

MANGANESE - GENERAL

- **Secondary Contaminant**
  - Main Consideration is Discoloration
  - Taste also Mentioned as a Concern
  - US EPA SMCL = 0.05 mg/L

- **Customers will Notice at 0.02 mg/L**
  - This tends to override the SMCL

MANGANESE CHEMISTRY

- **Mn^{+2}**
  - Reduced form is soluble
    - Released from anaerobic sediments in reservoirs
    - Released from anaerobic solids in plants
    - Microbial cycling
- **Mn^{+4}**
  - Insoluble
  - Coagulation important for removing once formed
  - Creates discoloration – want it formed and removed in plant
- **Mn^{+7}**
  - Permanganate – Reacts with Mn^{+2} to Form Mn^{+4}

PARTICULATE VS. SOLUBLE MANGANESE

- **Important to Know if Particulate or Soluble to Control**
  - Oxidant addition not appropriate for particulate
- **Manganese Often Precipitates as a Small Colloidal Particle**
  - Some can pass through 0.45 um and even 0.2 um laboratory filters
  - Ultrafilters may be necessary to more clearly delineate particulate from soluble
  - Rough indication can be obtained by filtering in laboratory filter after a jar test with coagulant.

Klayman, Cheek, Pardee (2011), PNWS AWWA, Boise, ID

Manganese Profiles in Treatment

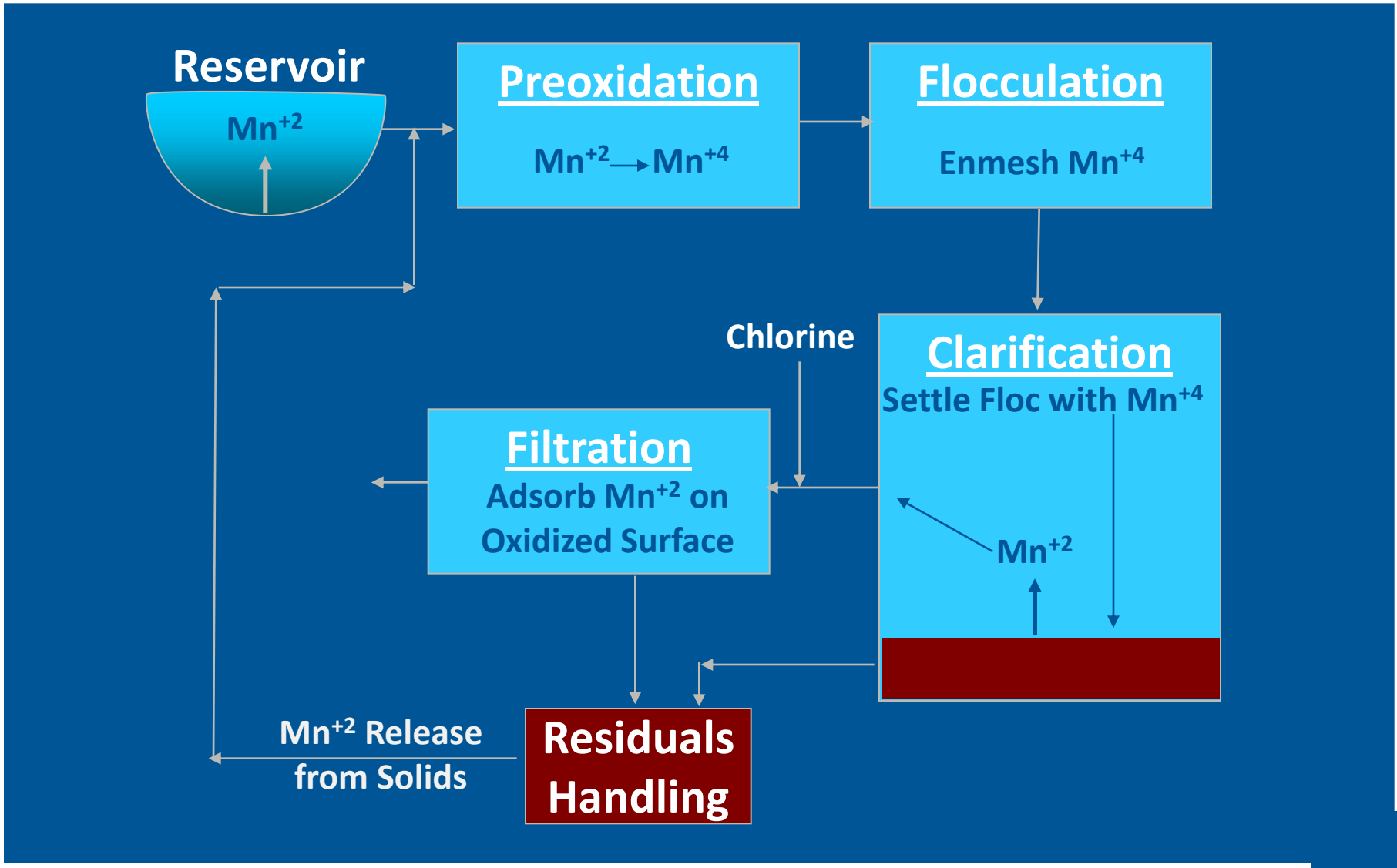

STEPS TO MANAGE MANGANESE

- **Source Water**
  - Selection of intake level
  - Reservoir aeration
- **Treatment**
  - Pre-oxidation with sufficient detention before coagulant
  - Limit solids retention time in channels and basins
  - Manage filter media to maintain oxidized coating
  - Possible application of filter aids if strong oxidants replace pre-chlorination
- **Distribution**
  - Complexing agents sometimes applied to prevent precipitation – careful about lead corrosion

Klayman, Cheek, Pardee (2011), PNWS AWWA, Boise, ID

STEPS TO MANAGE MANGANESE

- SPECIFIC TO COTTAGE GROVE

- Source Water
  - ~~Selection of intake level~~
  - ~~Reservoir aeration~~
- Treatment
  - Pre-oxidation with sufficient detention before coagulant
  - ~~Limit solids retention time in channels and basins~~
  - ~~Manage filter media to maintain oxidized coating~~
  - ~~Possible application of filter aids if strong oxidants replace pre-chlorination~~
- Distribution
  - ~~Complexing agents sometimes applied to prevent precipitation – careful about lead corrosion~~

Klayman, Cheek, Pardee (2011), PNWS AWWA, Boise, ID

PRETREATMENT OPTIONS FOR OXIDATION

- $KMnO_4$
- ClO_2
- O_3
- Cl_2
- O_2

Klayman, Cheek, Pardee (2011), PNWS AWWA, Boise, ID

PRETREATMENT OPTIONS FOR OXIDATION

- $KMnO_4$
- ClO_2
- Cl_2
- O_3
- O_2

- **1.92 mg KMnO4 : mg Mn**
- **0.94 mg KMnO4 : mg Fe**
- **Important:**
  oxidant only reacts with reduced forms of Fe and Mn

Klayman, Cheek, Pardee (2011), PNWS AWWA, Boise, ID

CITY OF COTTAGE GROVE

- Hydraulic flocculation
- No sedimentation
- Membrane filtration

ROW RIVER WATER TREATMENT PLANT

TREATMENT TRAIN SCHEMATIC

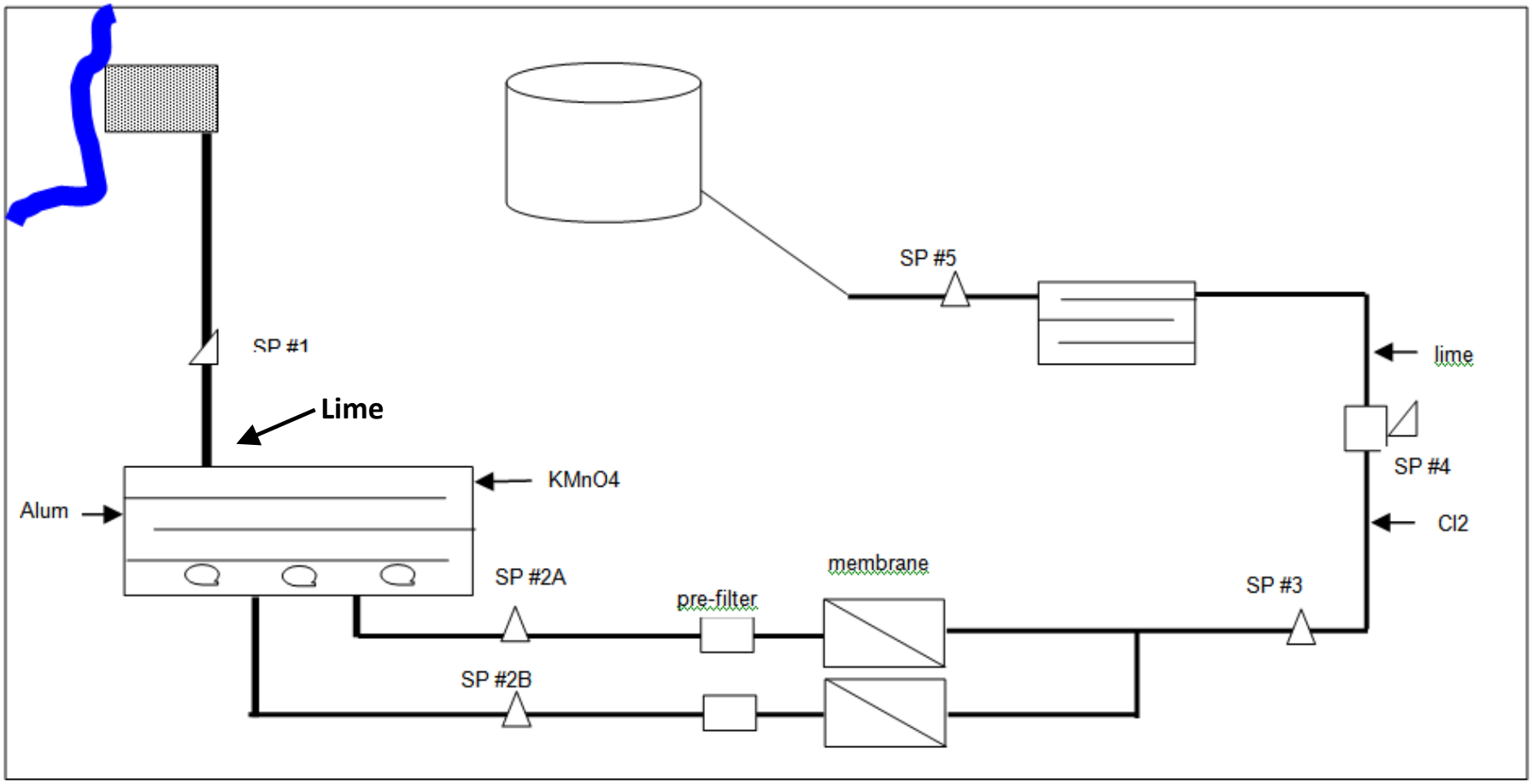

Klayman, Cheek, Pardee (2011), PNWS AWWA, Boise, ID

TREATMENT TRAIN SCHEMATIC

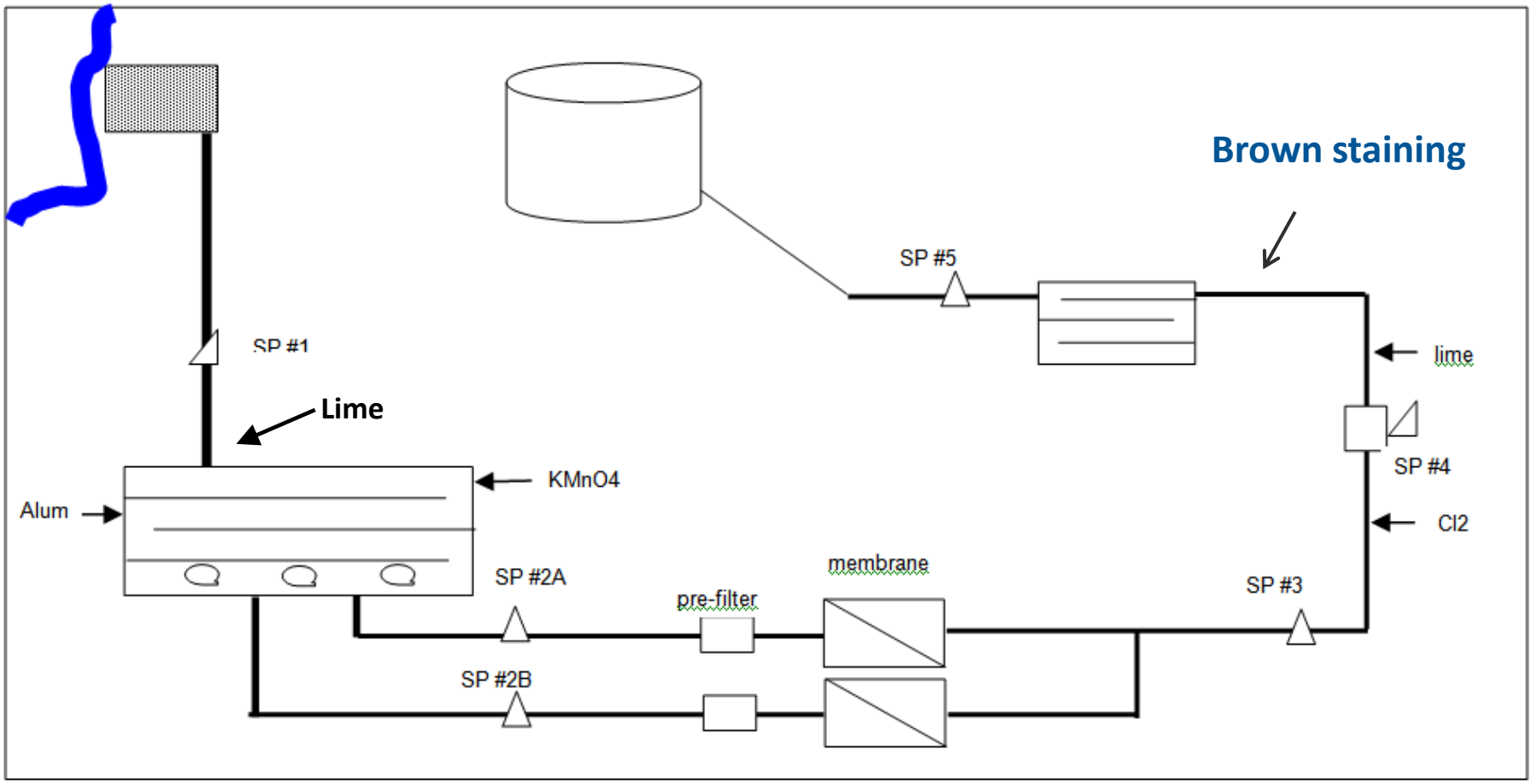

Klayman, Cheek, Pardee (2011), PNWS AWWA, Boise, ID

PALL ENCASED MEMBRANES

Klayman, Cheek, Pardee (2011), PNWS AWWA, Boise, ID

APPROACH

- Extended monitoring of raw water Fe, Mn, pH, Turb.
- Jar testing to determine proper dosage of pretreatment chemicals and conditions
- Phased-in adjustments of pretreatment chemicals at full scale
- Development of a tool to assist utility in making long-term pretreatment dosage decisions

TURBIDITY FROM THE ROW RIVER

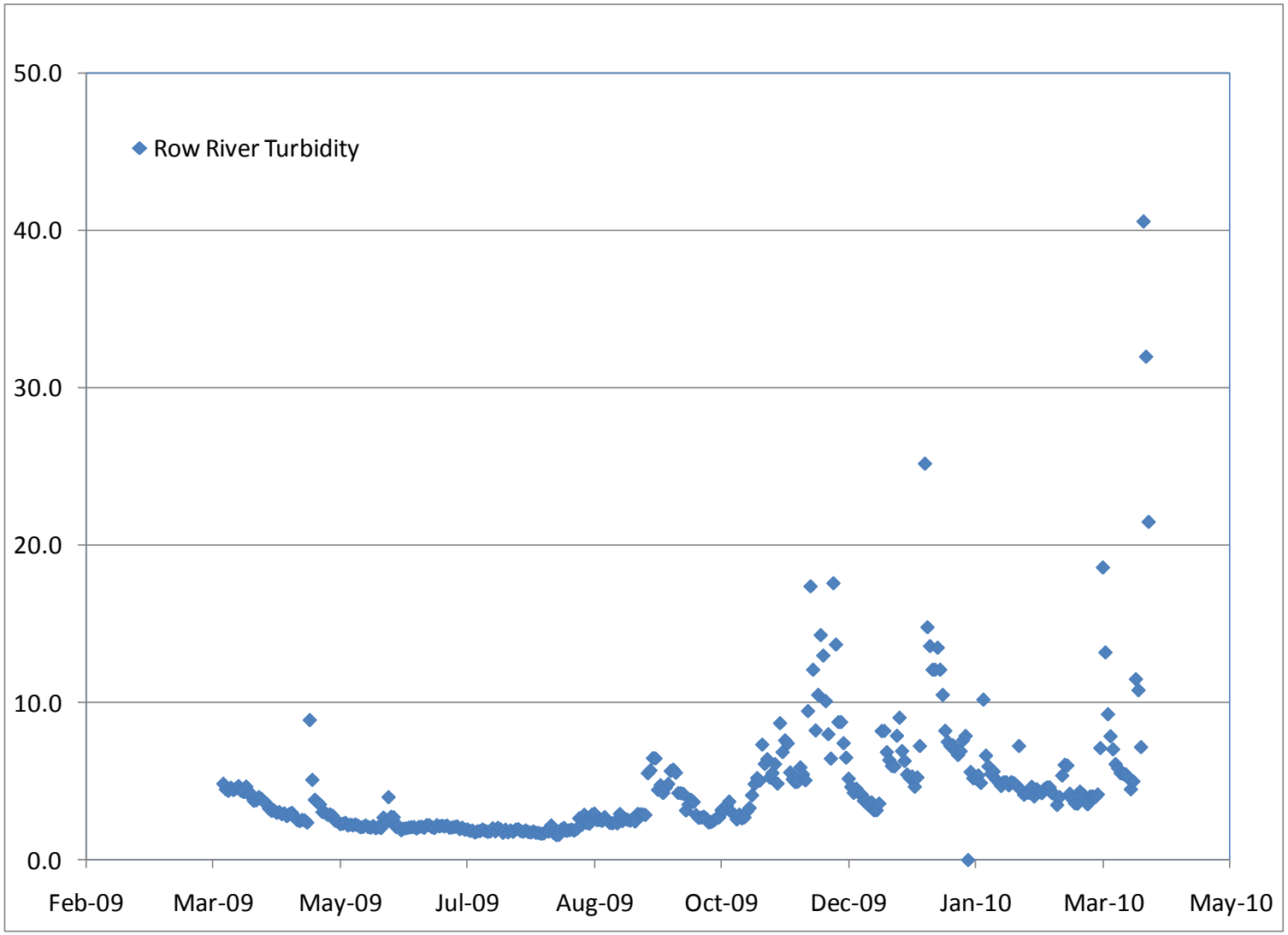

SEASONAL VARIATION IN SOLUBLE Mn

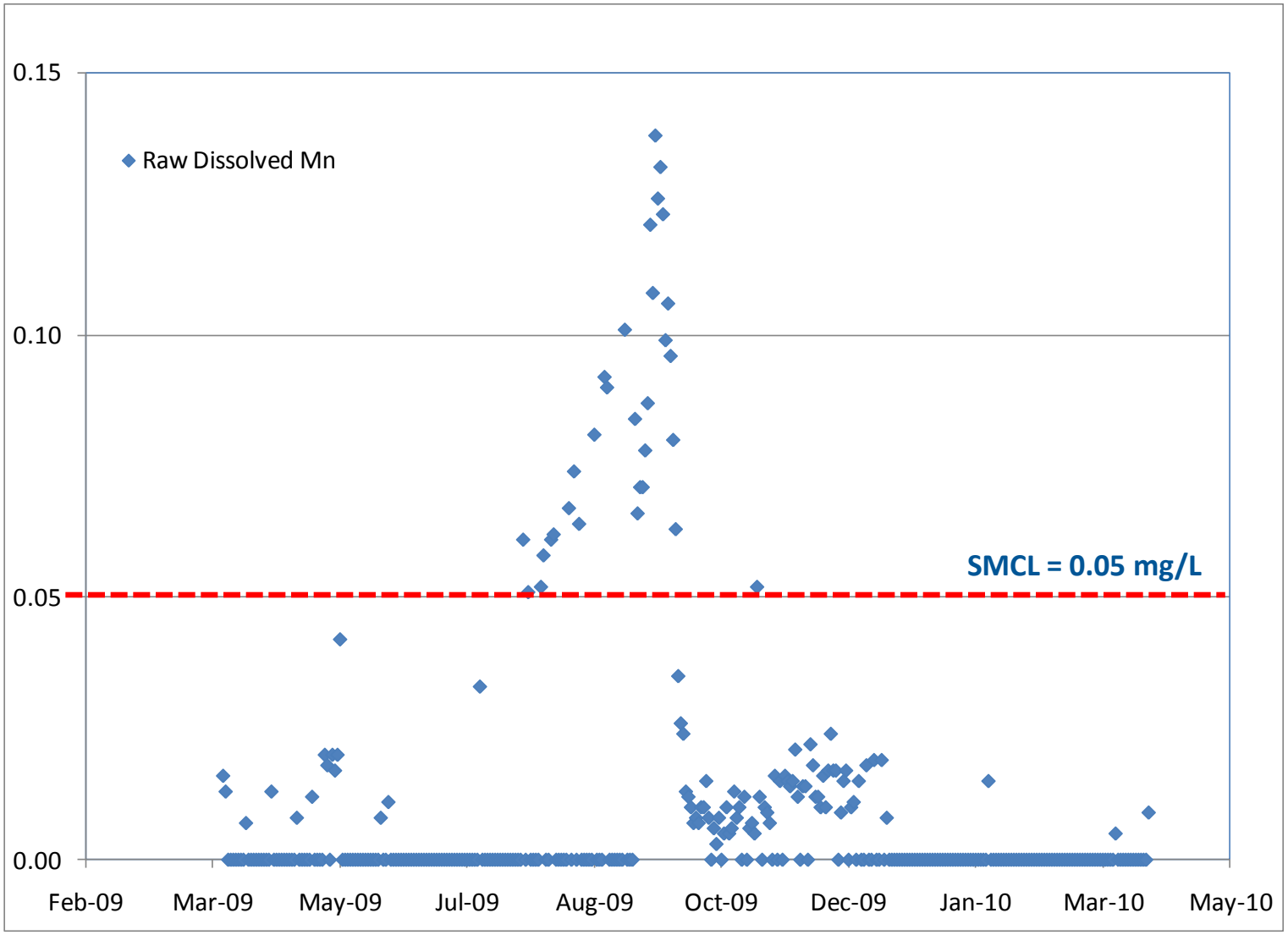

SIMILAR TREND FOR SOLUBLE IRON

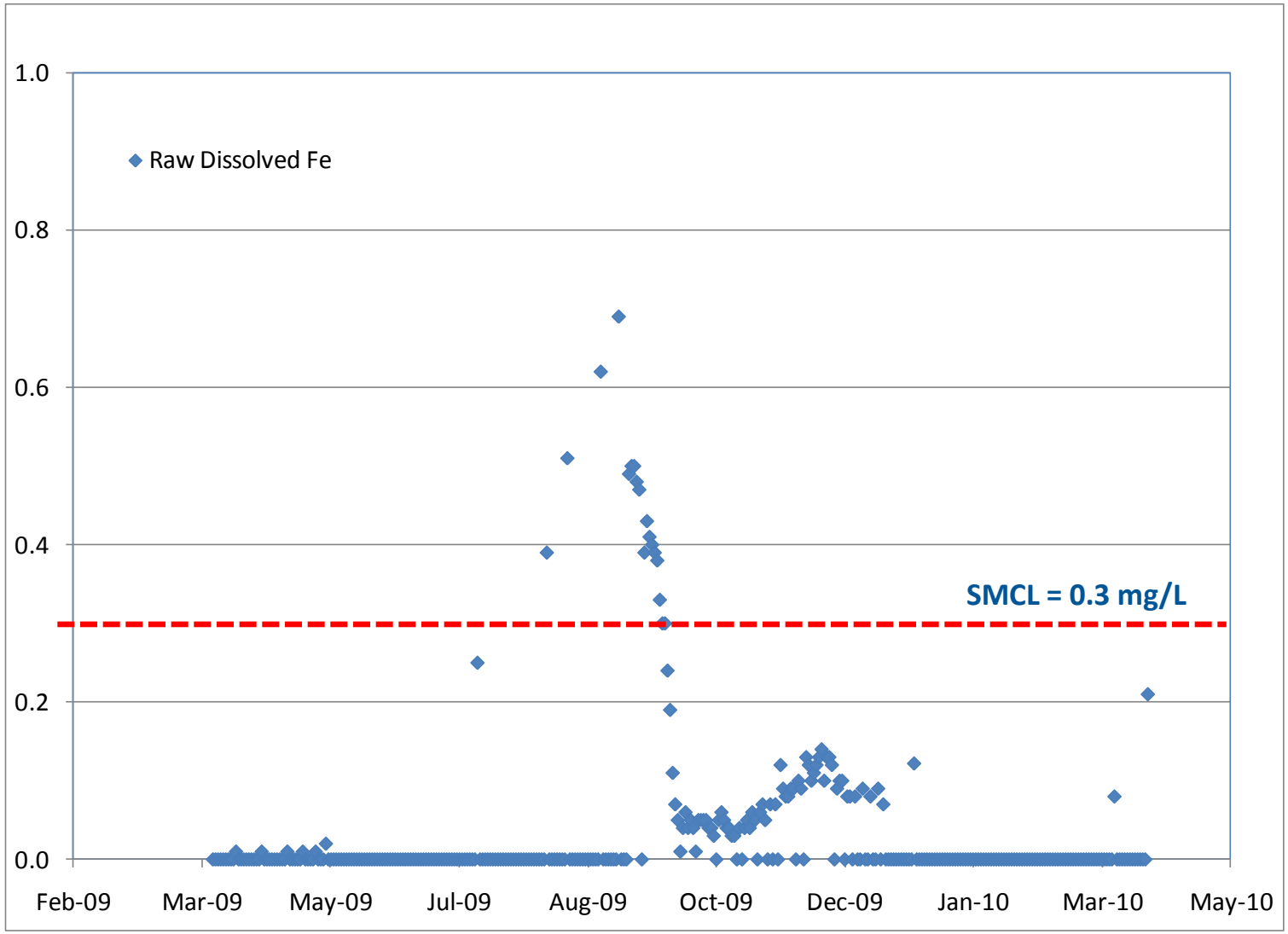

RAW WATER pH – SEASONAL AND DIURNAL PATTERNS

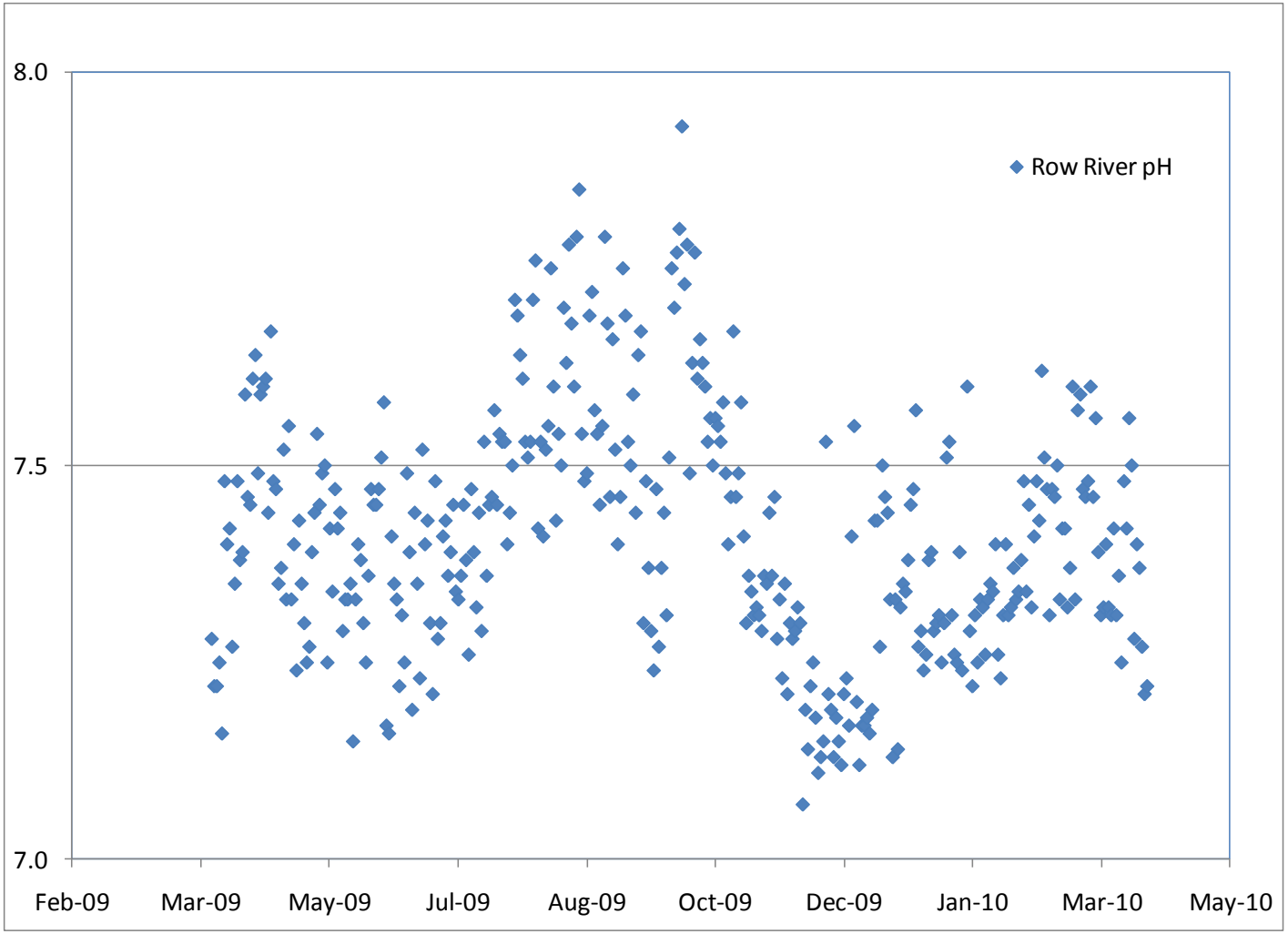

Klayman, Cheek, Pardee (2011), PNWS AWWA, Boise, ID

WHY IS JAR TESTING SO EFFECTIVE?

- Allows testing of multiple conditions at one time
- Repeatable testing
- Determine demand for oxidant from other constituents
- Site specific

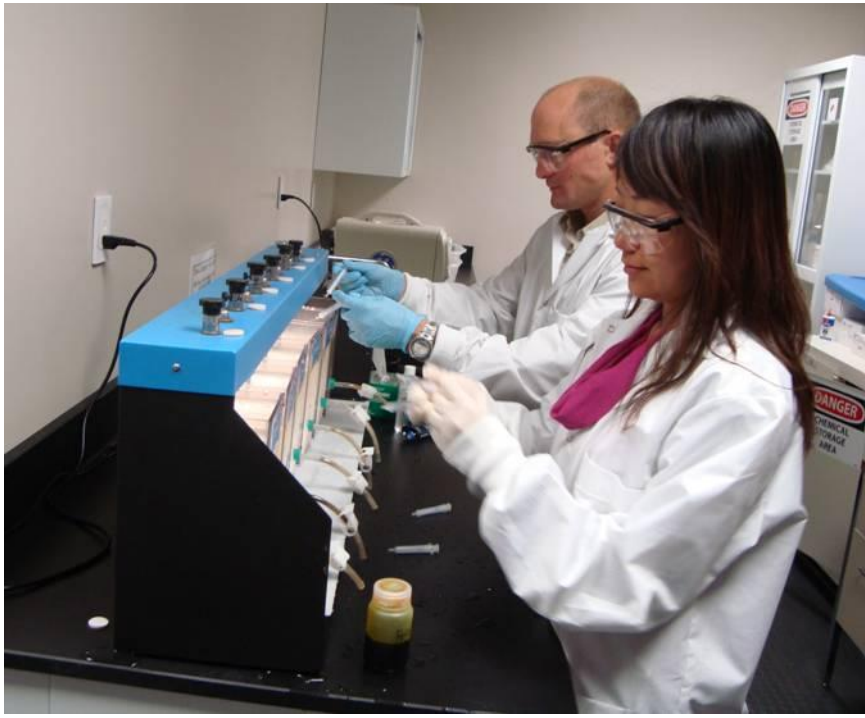

Klayman, Cheek, Pardee (2011), PNWS AWWA, Boise, ID

JAR TESTING RESULTS

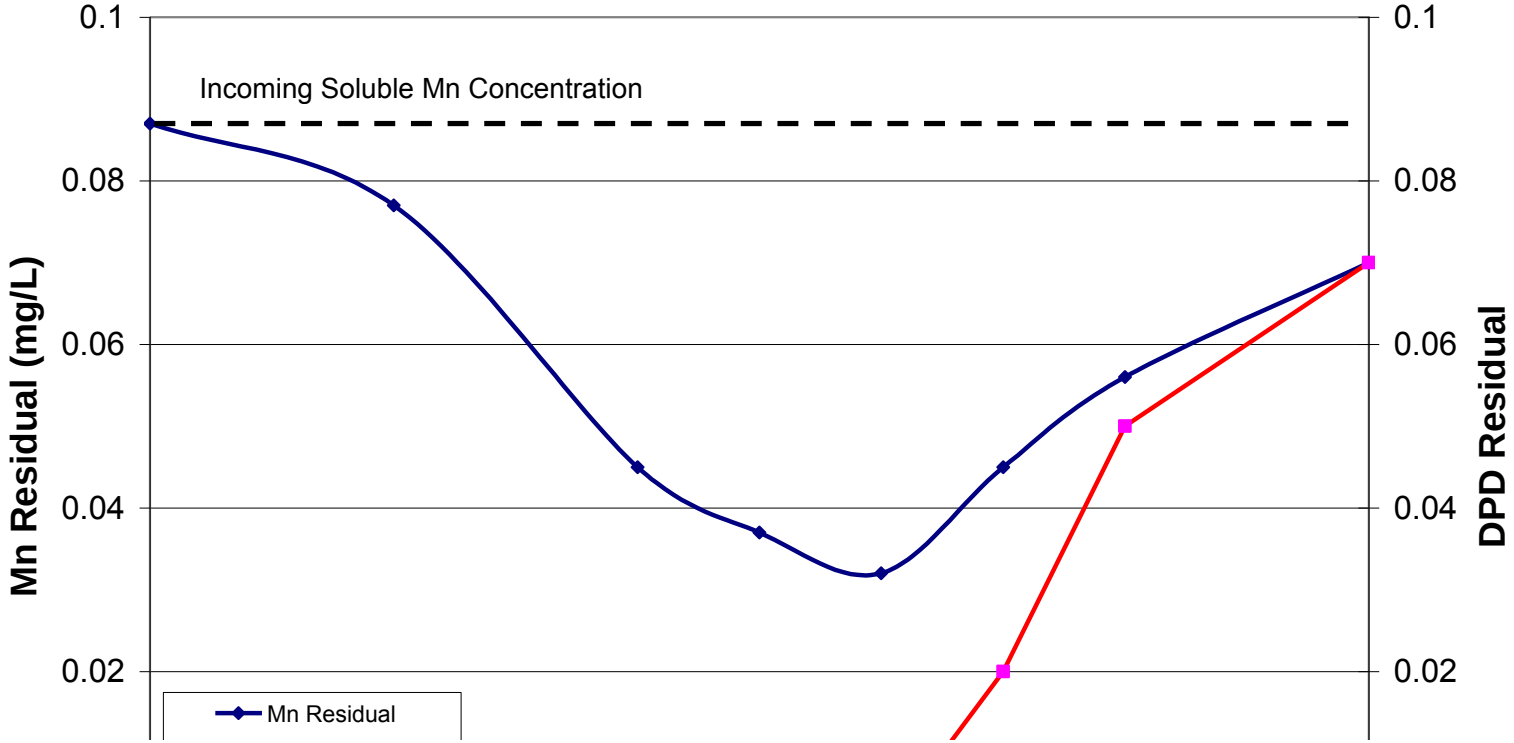

Klayman, Cheek, Pardee (2011), PNWS AWWA, Boise, ID

JAR TESTING RESULTS

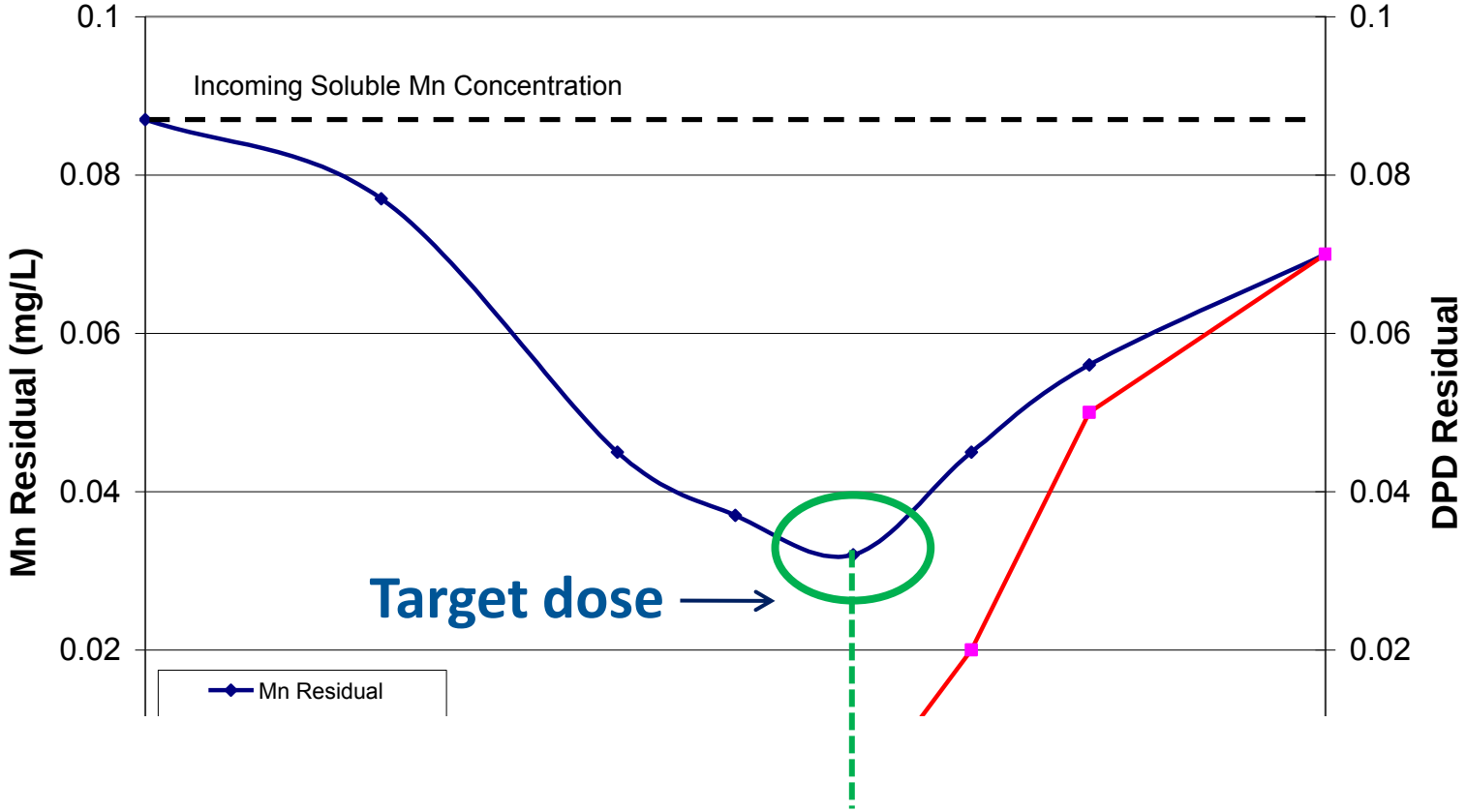

Klayman, Cheek, Pardee (2011), PNWS AWWA, Boise, ID

FULL SCALE ADJUSTMENTS

- Gradual changes in dosage
- 0.08, 0.15, 0.2, 0.25, and finally 0.3 mg/L over the course of about 4 hours

- At full scale $KMnO_4$ dose of 0.3 mg/L, finished water Mn was less than 0.01 mg/L

Klayman, Cheek, Pardee (2011), PNWS AWWA, Boise, ID

SITE-SPECIFIC EQUATION

- General form
  - ***$KMnO_4$ dose = X * Fe + Y * Mn***

- $KMnO_4$ dose = 0.25 * Fe + 2 * Mn
- Example
  - $KMnO_4$ dose = 0.25 * 0.5 + 2 * 0.08 = .29 mg/L

- Standard stoichiometry resulted in overfeeding $KMnO_4$ (0.66 mg/L)

Klayman, Cheek, Pardee (2011), PNWS AWWA, Boise, ID

ADAPTING TO CHANGING RAW WATER CONDITIONS

- Reservoir levels managed for fish, recreation
- Fluctuations in Fe, Mn and pH all impact treatment

- Pump output range limits
- Dilution of stock chemicals
- Low influent concentrations toughest to address

Klayman, Cheek, Pardee (2011), PNWS AWWA, Boise, ID

SUMMARY

- Customer driven / aesthetic issue
- Limited flexibility with membrane plant due to absence of oxidized coating
- Need site-specific solutions
- Proper dosing and monitoring raw water quality (pH, Fe, Mn) vital to success

CONTACT INFO

Benjamin Klayman, PhD, PE*

Water Process Engineer

Black & Veatch Corporation | 5885 Meadows Rd; Suite 700; Lake Oswego, OR 97035
503-443-4466 | KlaymanBJ@BV.com

***Licensed in OR, WA, KS**

Building a World of Difference.®