Kennedy/Jenks Consultants

Uncle Sam, ~~17~~ 12 Miles of Pipe, and the ~~236~~ 588-Day Salute

Christopher W. Kelsey, P.E.

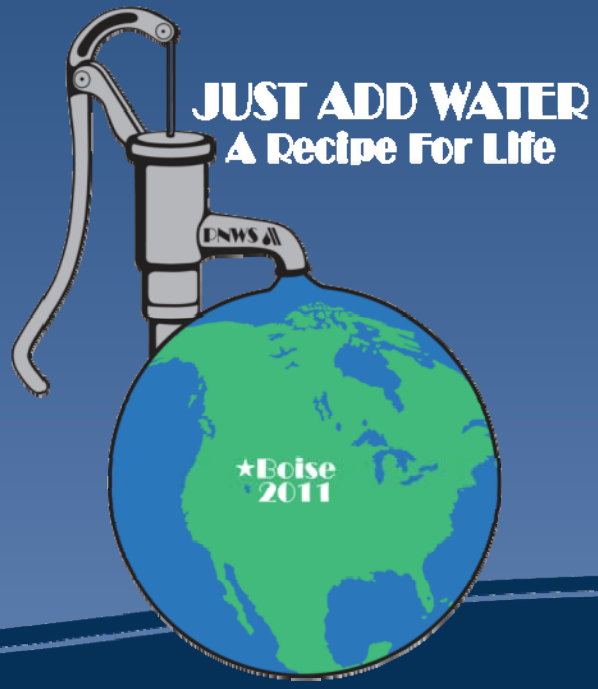

Outline

- Background
- Design
- Construction
- Lessons

A few pertinent acronyms…

NAS	Naval Air Station
NAVFAC	Naval Facilities Engineering Command
CLIN	Contract Line Item Number
UFC	Unified Facilities Criteria
DOR	Designer of Record

NAS Whidbey Facts

- Commissioned as active facility in 1942
- Other sites considered: Lake Ozette, Indian Island, Keystone Harbor, Penn Cove
- Ault Field, Seaplane Base, Outlying Field
- 7,800 active, 13,000 family, 2,200 civilian
- 19 active duty/2 ready reserve squadrons
- Many inherited from other facility closures in CA, Guam

Vicinity Map

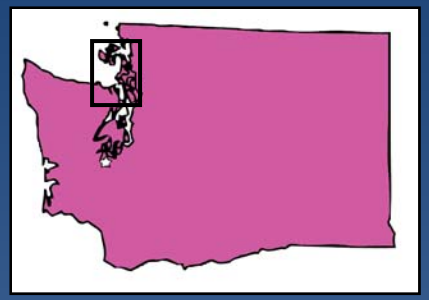

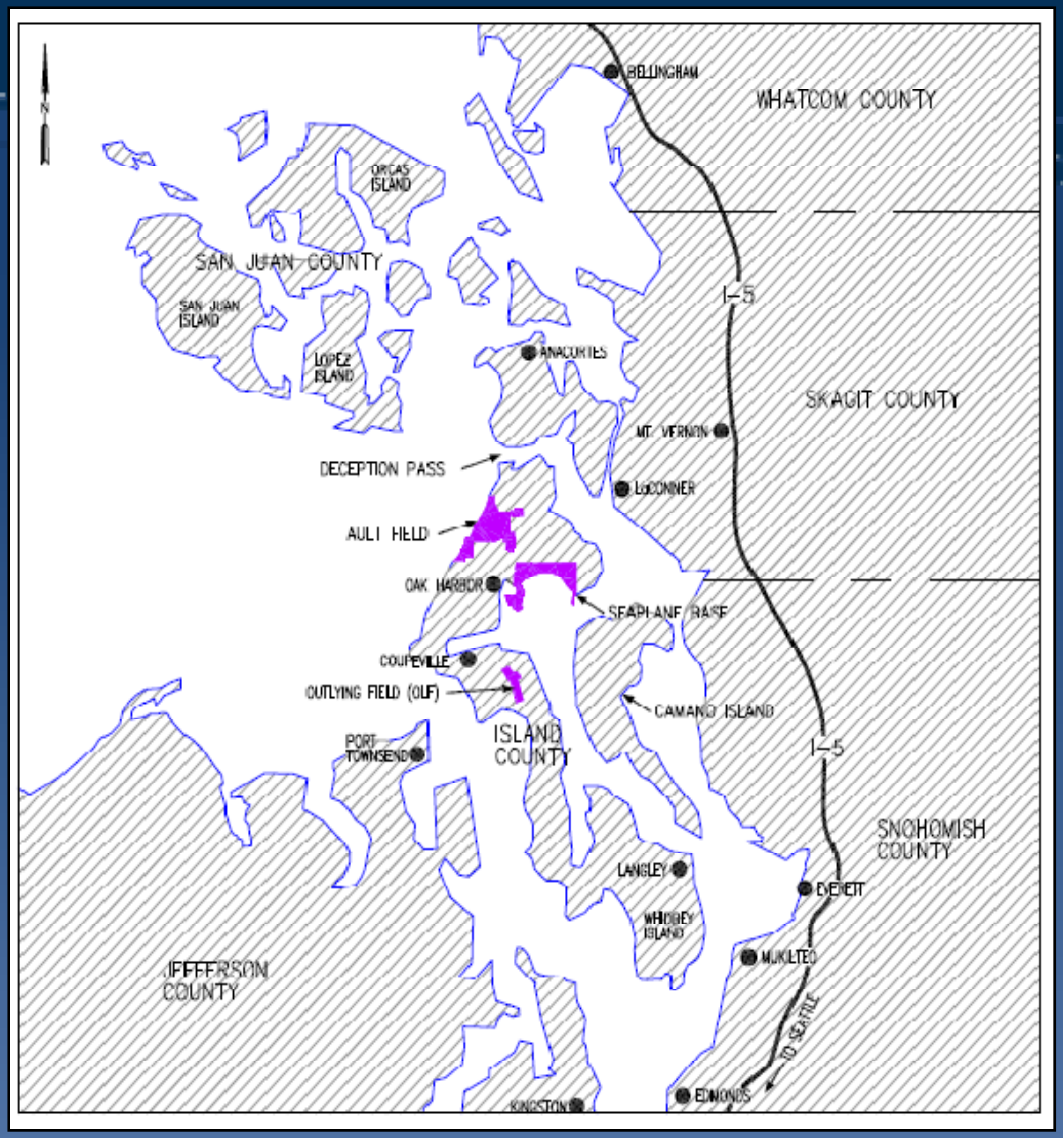

* Source: KPFF 2008 Water System Plan

P-236 Waterline Replacement

- Replace 17 miles of 45-60 year old AC pipe
- 7 individual CLINs
- Funded through $18M from ARRA stimulus
- Design/Build contract delivery
- Section 8(a) designated work
- Schedule requirements
  - 236 days design phase – 5/10
  - 549 days construction phase (approved CLINs) – 3/11

CLINs 1-7

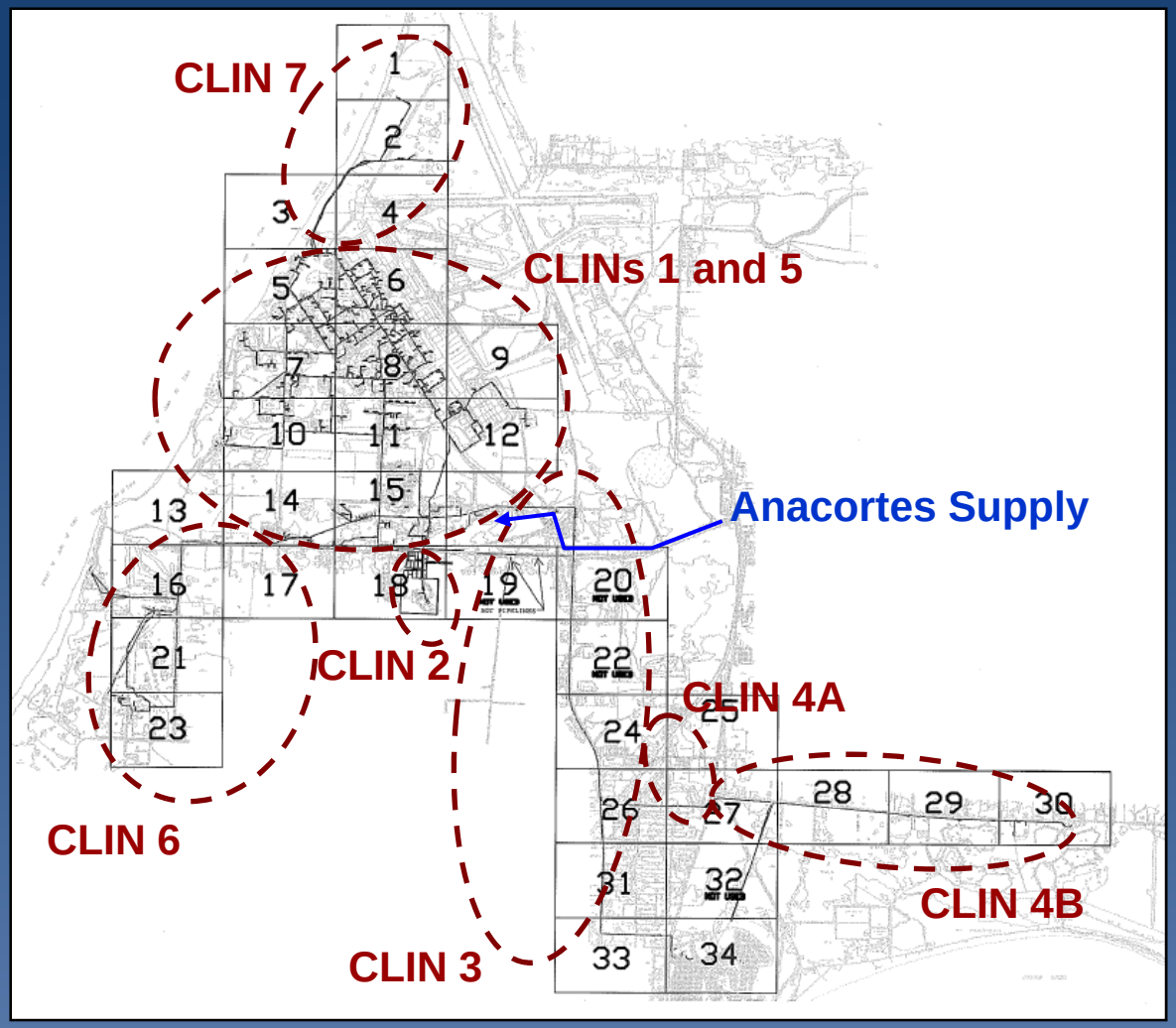
CLIN 7
CLINs 1 and 5
Anacortes Supply
CLIN 2
CLIN 4A
CLIN 6
CLIN 4B
CLIN 3
1
2
3
4
5
6
7
8
9
10
11
12
13
14
15
16
17
18
19
20
21
22
23
24
25
26
27
28
29
30
31
32
33
34

NAS Whidbey Water System

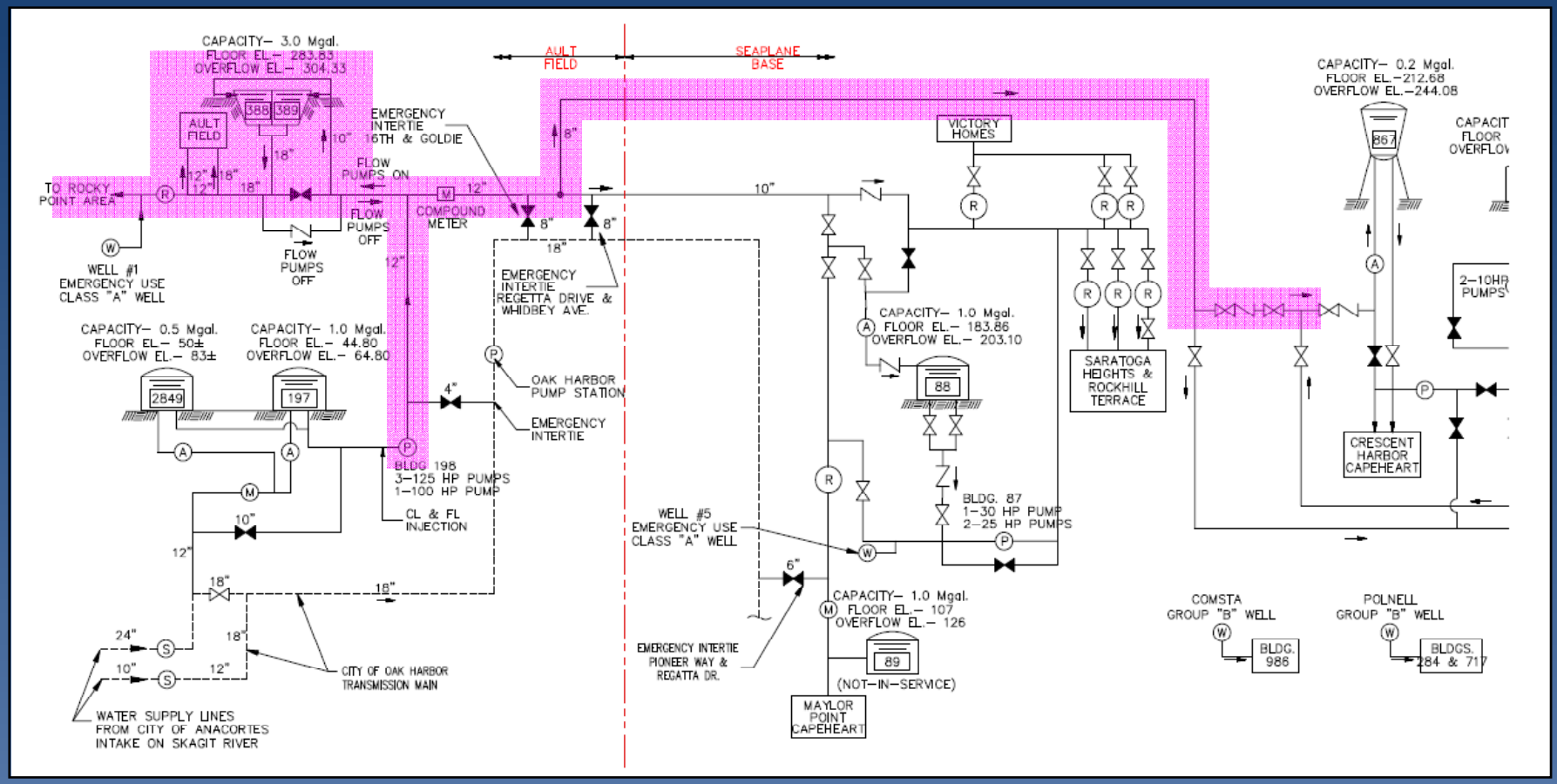

* Source: KPFF 2008 Water System Plan

Design Period Framework

- Safety/traffic plans, schedules, permitting
- Site investigations – utility locates, survey and geotechnical
- 35%, 100% design review periods
- Submitted design documents
  - Basis of Design (calculations/pipe size verification)
  - Geotechnical Report
  - Plans
  - Performance Technical Specifications (products)
  - Prescriptive Specifications (UFGS)

Basis of Design

- Meet AWWA, WSDOT, DOH and pertinent utility standards (City, County and Navy UFC)
- Verification through hydraulic modeling resulted in 3 suggested pipe size modifications
- Calculations offered:
  - Pipe thickness
  - Thrust restraint
  - Soil bearing pressure
  - Valve sizing

Pipe Size Verification

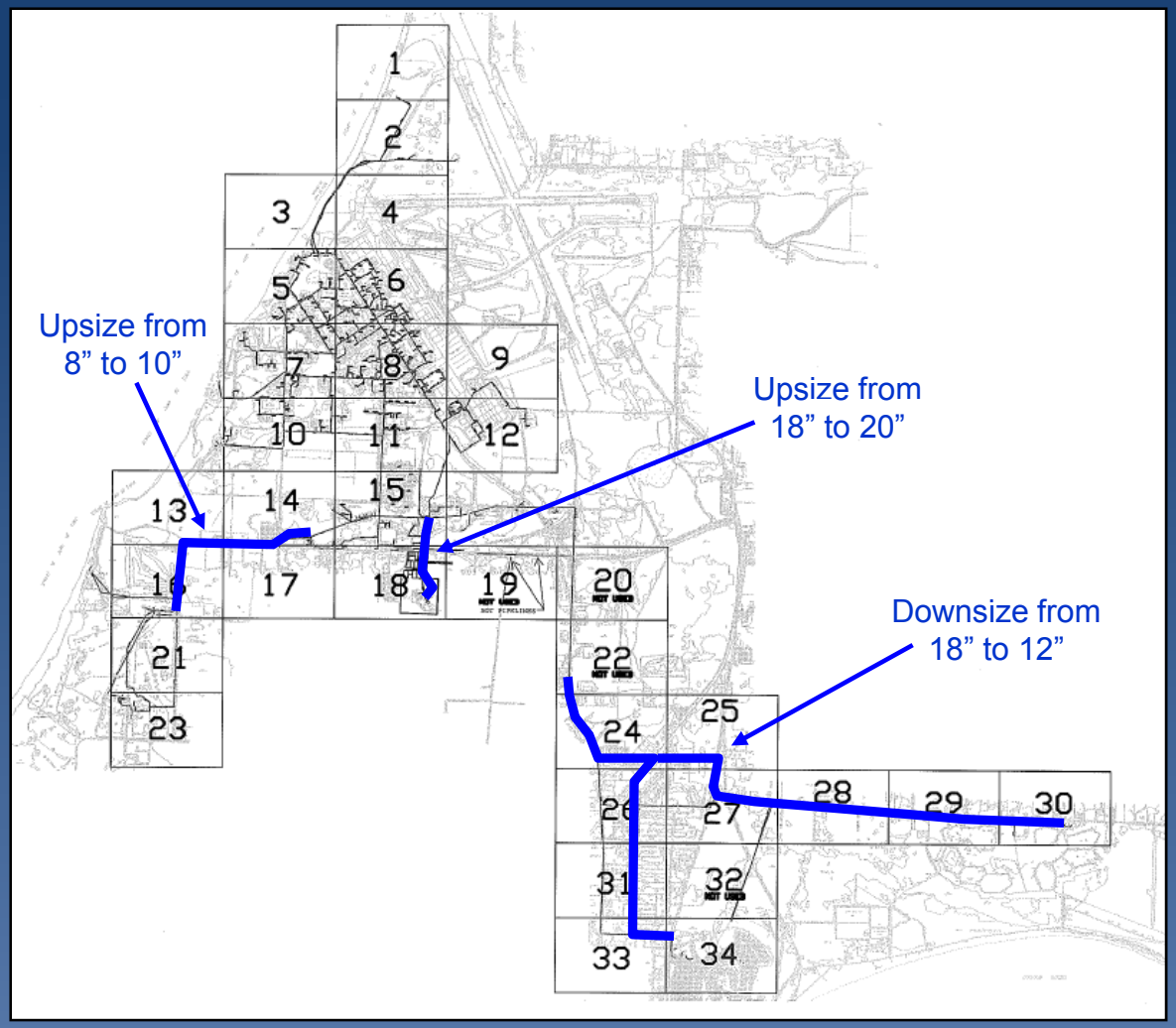

Thrust Restraint

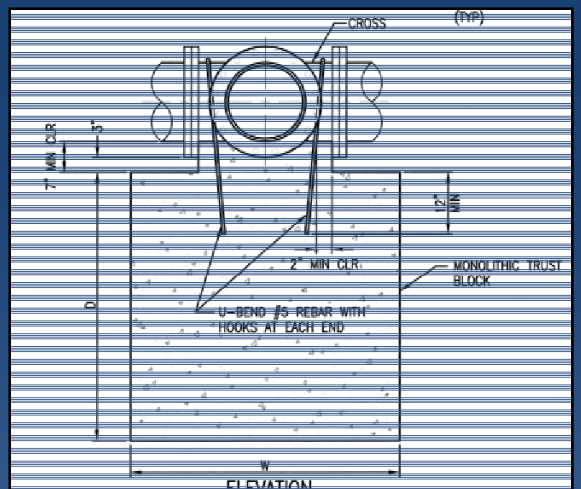

ELEVATION

SIZE OF THRUST BLOCK		
SIZE OF CROSS	D	W
18"	5'	5'
14"	4'	4'
12"	3.5'	3.5'
10"	3'	3'
8"	2'	2'
6"	1.5'	1.5'

TYPICAL THRUST BLOCK FOR FLANGE CROSS DETAIL

NOT TO SCALE

VERTICAL BEND THRUST BLOCK (AT 225 PSI)				
BEND DEFLECTION ANGLE	PIPE SIZE IN INCHES			
Δ	8	10	12	18
PIPE OD	9.05	11.10	13.20	19.50
(DEGREES)	THRUST BLOCK VOLUME IN FT3			
11.25	19	28	40	87
22.5	37	56	79	171
45	68	103	145	317
90	96	145	205	448

VERTICAL BEND THRUST BLOCK DETAIL TABLE

	NOMINAL PIPE SIZE							
	4"	6"	8"	10"	12"	14"	16"	18"
BEND ANGLE, IN DEGREES	NOMINAL LENGTH TO BE RESTRAINED ON EACH SIDE OF FITTING, IN FEET							
11.25	5	5	5	5	5	5	10	10
22.5	10	10	10	10	10	15	15	15
45, Tee & Dead End	20	20	20	20	40	40	40	40
90 & Cross	20	40	40	40	60	60	60	70

RESTRAINED JOINT FITTING DETAIL

THRUST BLOCK REQUIREMENTS																
BEARING AREA REQUIRED IN SQUARE FEET																
		TEE/CAP OR PLUG			90 Degree BEND			45 Degree BEND			22.5 Degree BEND			11.25 Degree BEND		
PIPE SIZE	PIPE SIZE	200	225	250	200	225	250	200	225	250	200	225	250	200	225	250
nominal	outside dia.	psi	psi	psi	psi	psi	psi	psi	psi	psi	psi	psi	psi	psi	psi	psi
4	4.80	1.8	2.0	2.3	2.6	2.9	3.2	1.4	1.6	1.7	0.7	0.8	0.9	0.4	0.4	0.4
6	6.90	3.7	4.2	4.7	5.3	5.9	6.6	2.9	3.2	3.6	1.5	1.6	1.8	0.7	0.8	0.9
8	9.05	6.4	7.2	8.0	9.1	10.2	11.4	4.9	5.5	6.2	2.5	2.8	3.1	1.3	1.4	1.6
12	13.20	13.7	15.4	17.1	19.4	21.8	24.2	10.5	11.8	13.1	5.3	6.0	6.7	2.7	3.0	3.4
16	17.40	23.8	26.8	29.7	33.6	37.8	42.0	18.2	20.5	22.7	9.3	10.4	11.6	4.7	5.2	5.8
18	19.50	29.9	33.6	37.3	42.2	47.5	52.8	22.9	25.7	28.6	11.7	13.1	14.6	5.9	6.6	7.3
24	25.80	52.3	58.8	65.3	73.9	83.2	92.4	40.0	45.0	50.0	20.4	22.9	25.5	10.2	11.5	12.8

Pipe Thickness – Class 350

Recommended Pressure Class Thicknesses

	Pipe Thicknesses		Pressure Class		
Pipe Size	Internal Pressure	Bending Stress	250	300	350
(in.)	(in.)	(in.)	Nominal Thickness in inches		
4	0.16	0.14	-	-	0.25
6	0.17	0.15	-	-	0.25
8	0.18	0.16	-	-	0.25
10	0.21	0.17	-	-	0.26
12	0.22	0.18	-	-	0.28
14	0.24	0.19	0.28	0.30	0.31
16	0.25	0.20	0.30	0.32	0.34
18	0.27	0.21	0.31	0.34	0.36

Bagging on CLINs 1, 5, 7, and 4B

Seismic Considerations

SEISMIC AREAS		
FAULT ID	PLAN SHEET	ESTIMATED STATION
UTSALADY POINT FAULT NO. 5	CLIN3-4A	6+30
UTSALADY POINT FAULT NO. 1	CLIN3-4E	38+40
UTSALADY POINT FAULT NO. 1	CLIN3-5A	2+30
UTSALADY POINT FAULT NO. 5	CLIN6-1J	75+00
DEVILS MOUNTAIN FAULT NO. 7	CLIN7-1A	8+00
DEVILS MOUNTAIN FAULT NO. 1	CLIN7-1D	28+00

JOINT RESTRAINT AND USE OF SAND AS BEDDING/BACKFILL MATERIAL WILL BE PROVIDED FOR 2 PIPE JOINTS ON EITHER SIDE OF THE ESTIMATED STATIONS

SEISMIC AREA LOCATION SCHEDULE

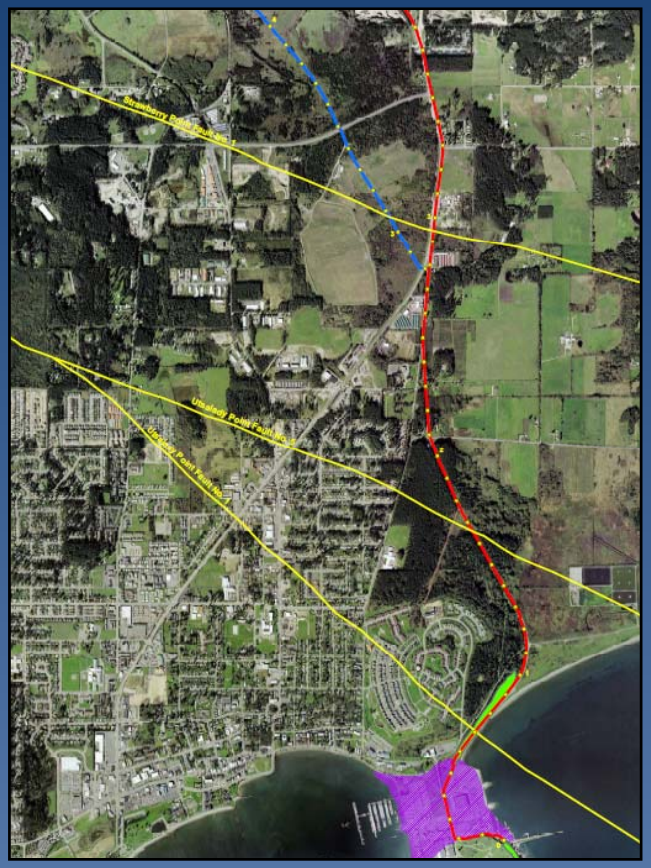

Permitting

- Borings
  - Business licenses, additional insured, work plans, utility locates, bonding
- JARPA nationwide permit
  - Cat-Ex for EIS
  - Wetlands delineation
  - < 0.5 acre (no mitigation)

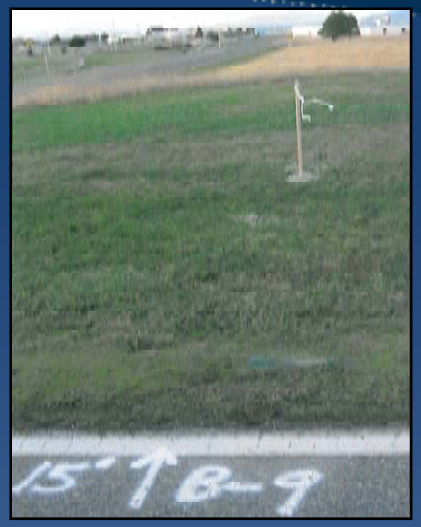

Ground Penetrating Radar (GPR)

- RFP requirement
- Technology limitations

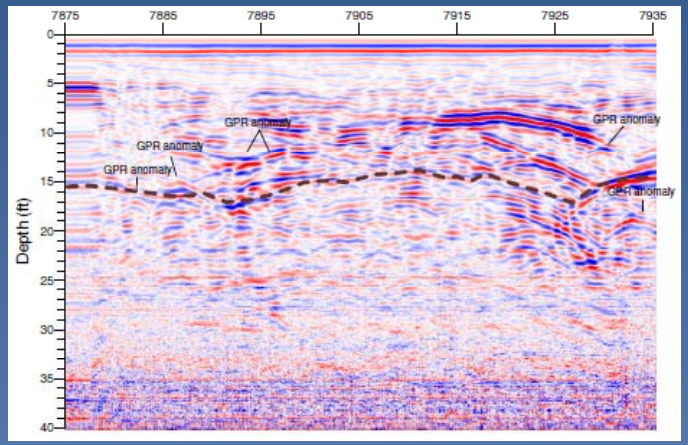

Pipeline Separation / Conflicts

Pipeline Separation

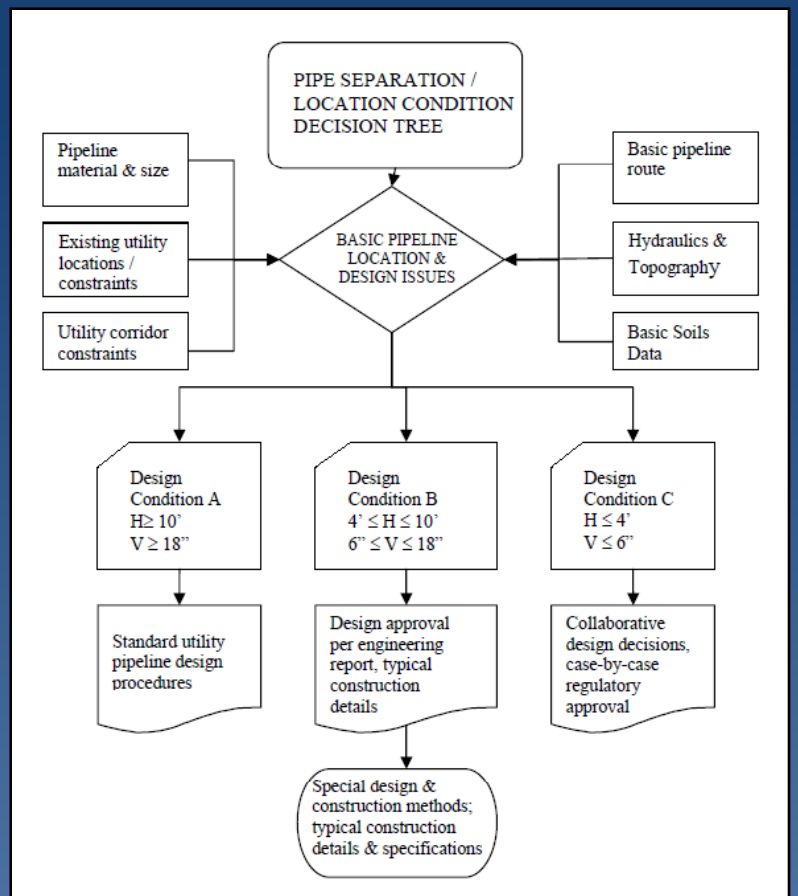

Figure 16: Pipe separation assessment decision tree

* Source: 2006 DOH/DOE Reference Guide

- 2006 DOH/DOE Reference Guide and 10 State Standards
- 10' horizontal and 18" vertical or special construction
- Concrete encasement

Pipeline Separation Approach

- Encasement not detailed
- Vapor barriers, CDF, restrained joints detailed
- Sewer force mains relocated underneath installed lines

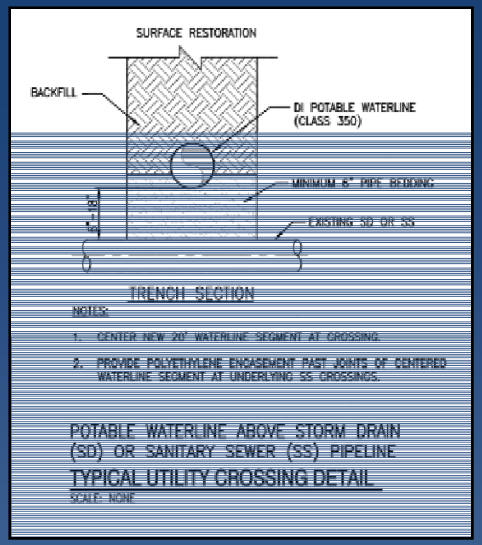

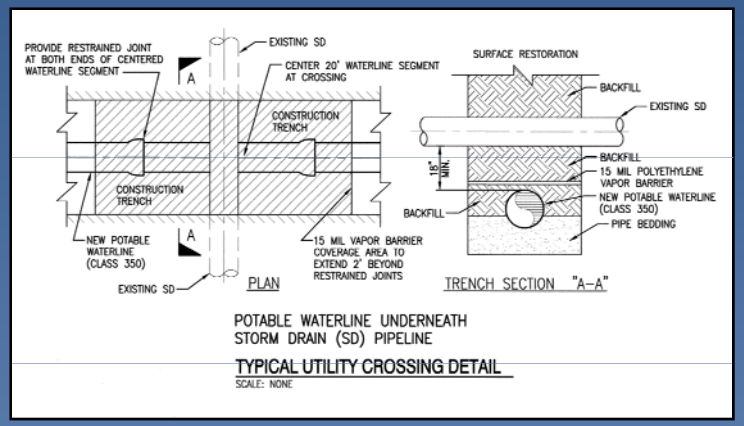

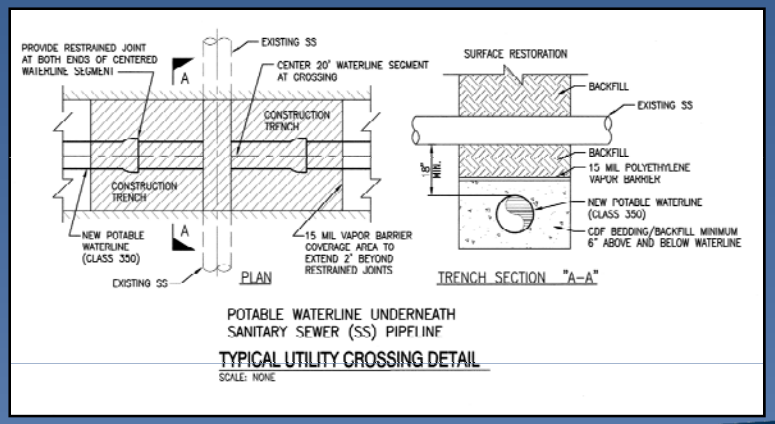

Utility Conflicts

Where room appears available on the shoulder…

…installation was forced into the street!

Design Period Grievances

- Schedule minimized opportunities to review project scope and value engineer
- Record drawings
- Limited involvement from contract operator
- Lack of City involvement after 35%

Hmmppff #1

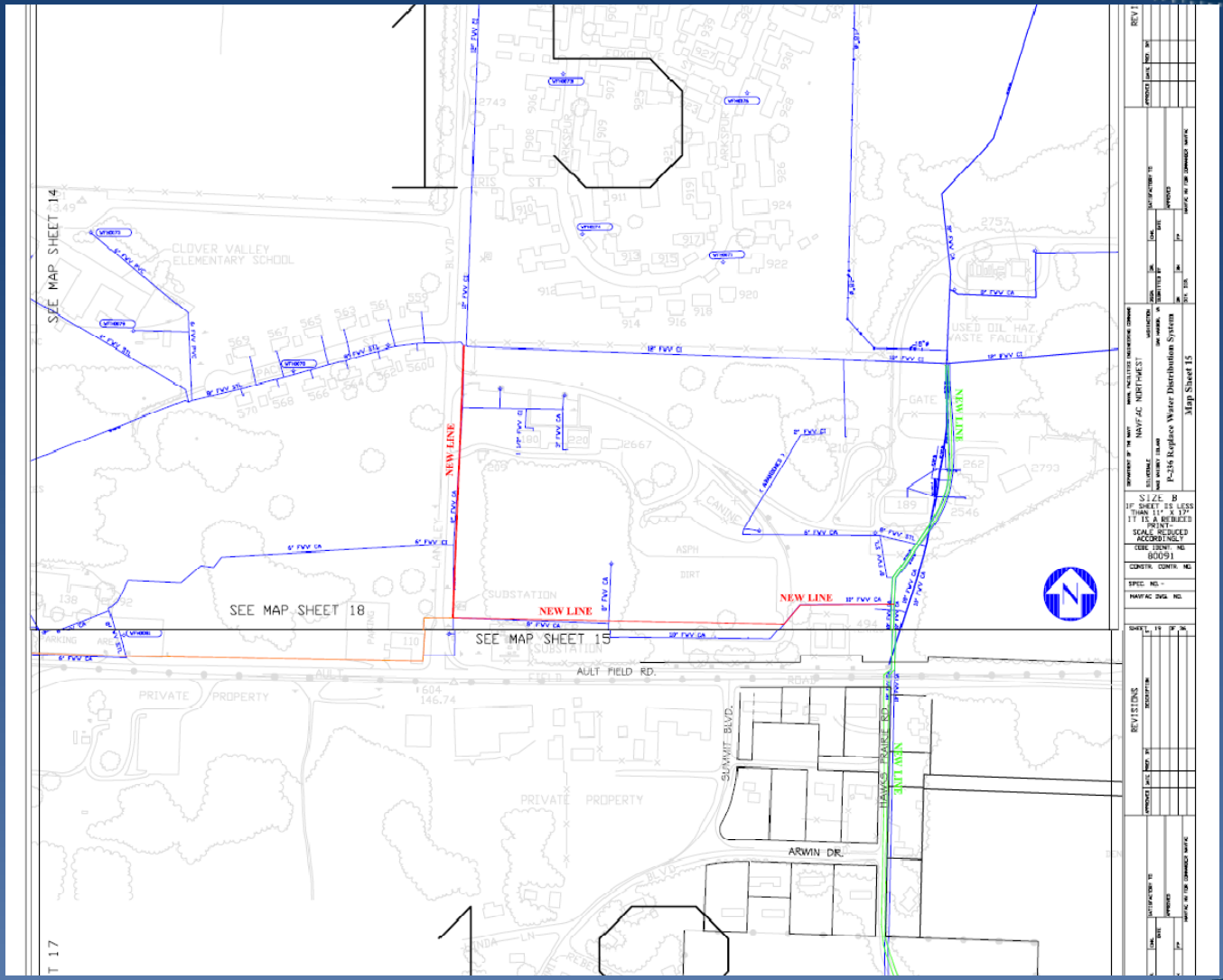
SEE MAP SHEET 14
SEE MAP SHEET 18
SEE MAP SHEET 15
CLOVER VALLEY ELEMENTARY SCHOOL
NEW LINE
AULT FIELD RD.
SUMMIT BLVD.
ARWIN DR.
PRIVATE PROPERTY
SUBSTATION
USED OIL HAZ. WASTE FACILITY
NAVFAC NORTHWEST
P-256 Replace Water Distribution System
Map Sheet 15
SIZE B
80091
REVISIONS

Hmmppff #1

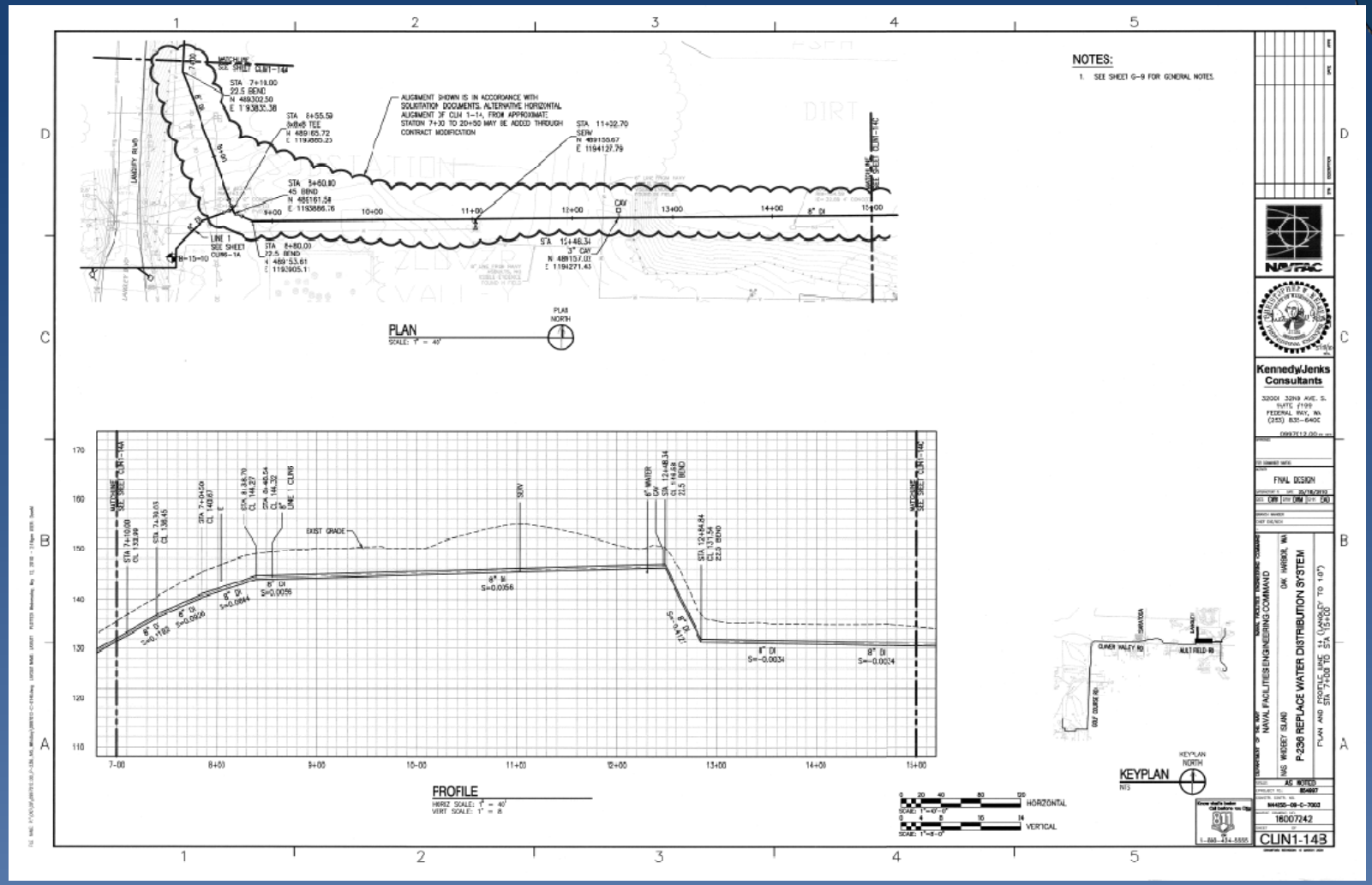
NOTES:
1. SEE SHEET G-9 FOR GENERAL NOTES.
PLAN
SCALE: 1" = 40'
PROFILE
HORIZ SCALE: 1" = 40'
VERT SCALE: 1" = 8'
KEYPLAN
NAVFAC
Kennedy/Jenks Consultants
FINAL DESIGN
NAVAL FACILITIES ENGINEERING COMMAND
OAK HARBOR, WA
WHIDBEY ISLAND
P-236 REPLACE WATER DISTRIBUTION SYSTEM
16007242
CLIN1-143

Hmmppff #1

Hmmppff #2

- CLINs 3 and 4A removed
- City no longer actively involved

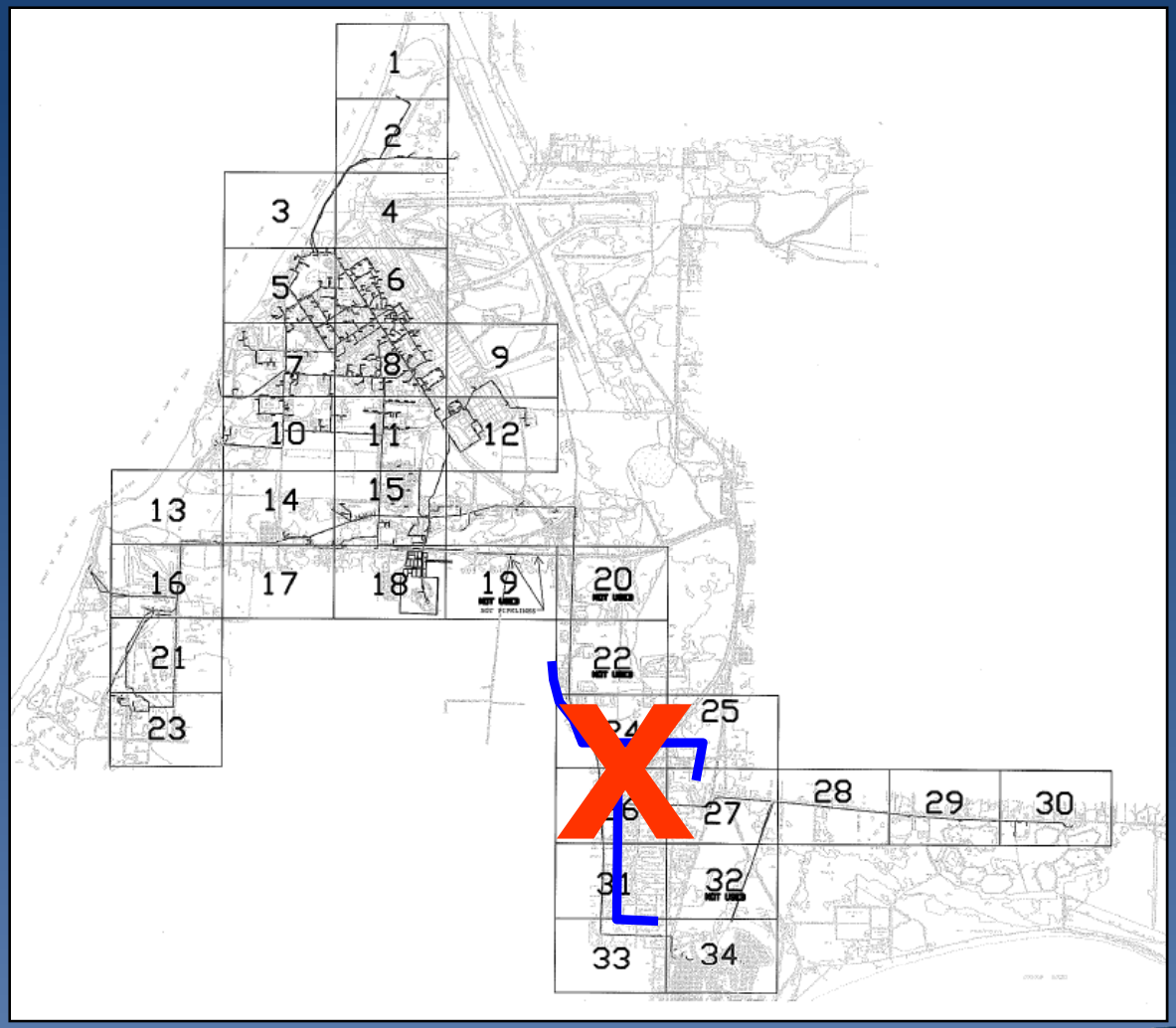

Hmmppff #3

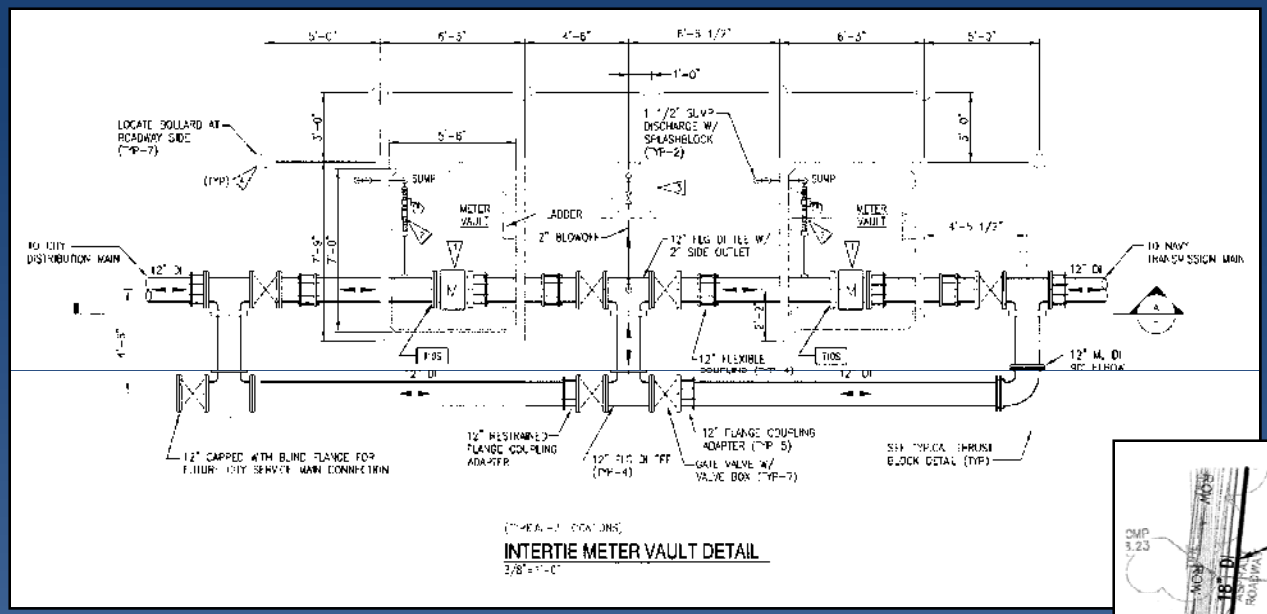
LOCATE BOLLARD AT ROADWAY SIDE (TYP-7)
SUMP
METER VAULT
LADDER
2" BLOWOFF
12" FLG DI TEE W/ 2" SIDE OUTLET
12" FLEXIBLE COUPLING
12" FLANGE COUPLING ADAPTER
GATE VALVE W/ VALVE BOX
12" CAPPED WITH BLIND FLANGE FOR FUTURE CITY SEWER MAIN CONNECTION
INTERTIE METER VAULT DETAIL

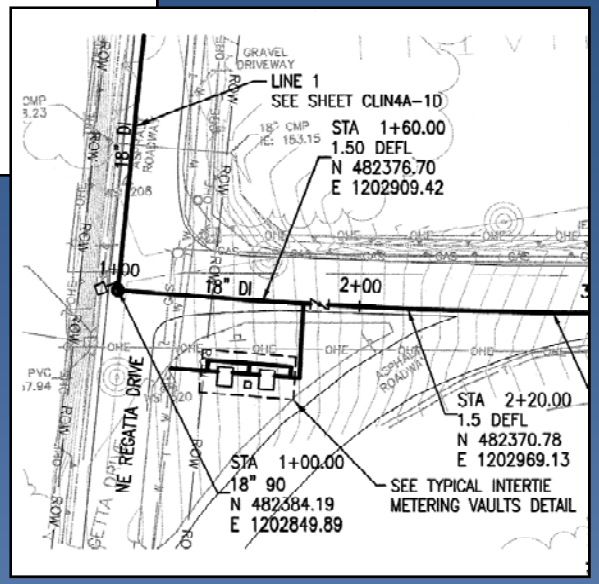
GRAVEL DRIVEWAY
LINE 1
SEE SHEET CLIN4A-10
STA 1+60.00
1.50 DEFL
N 482376.70
E 1202909.42
18" DI
2+00
STA 2+20.00
1.5 DEFL
N 482370.78
E 1202969.13
STA 1+00.00
18" 90
N 482384.19
E 1202849.89
SEE TYPICAL INTERTIE METERING VAULTS DETAIL
NE REGATTA DRIVE

Hmmppff #3

Some Partnering on Valves

- Contract requirements
  - Gate valves for 12” and under
  - BFVs for larger
  - Full line size
  - 3 at tees, 4 at crosses
  - BFVs be placed in “approved pits”
- Valve boxes permitted for BFVs in pavement
- Concrete collars not required on valve boxes in pavement

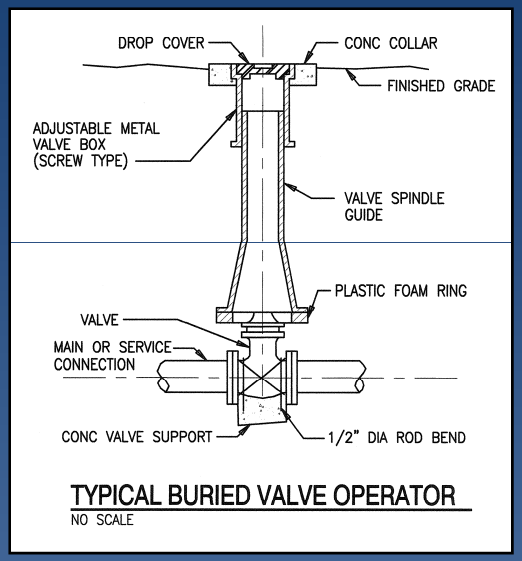

Other Construction Issues - Restoration

- "Match existing"
- Joint seal

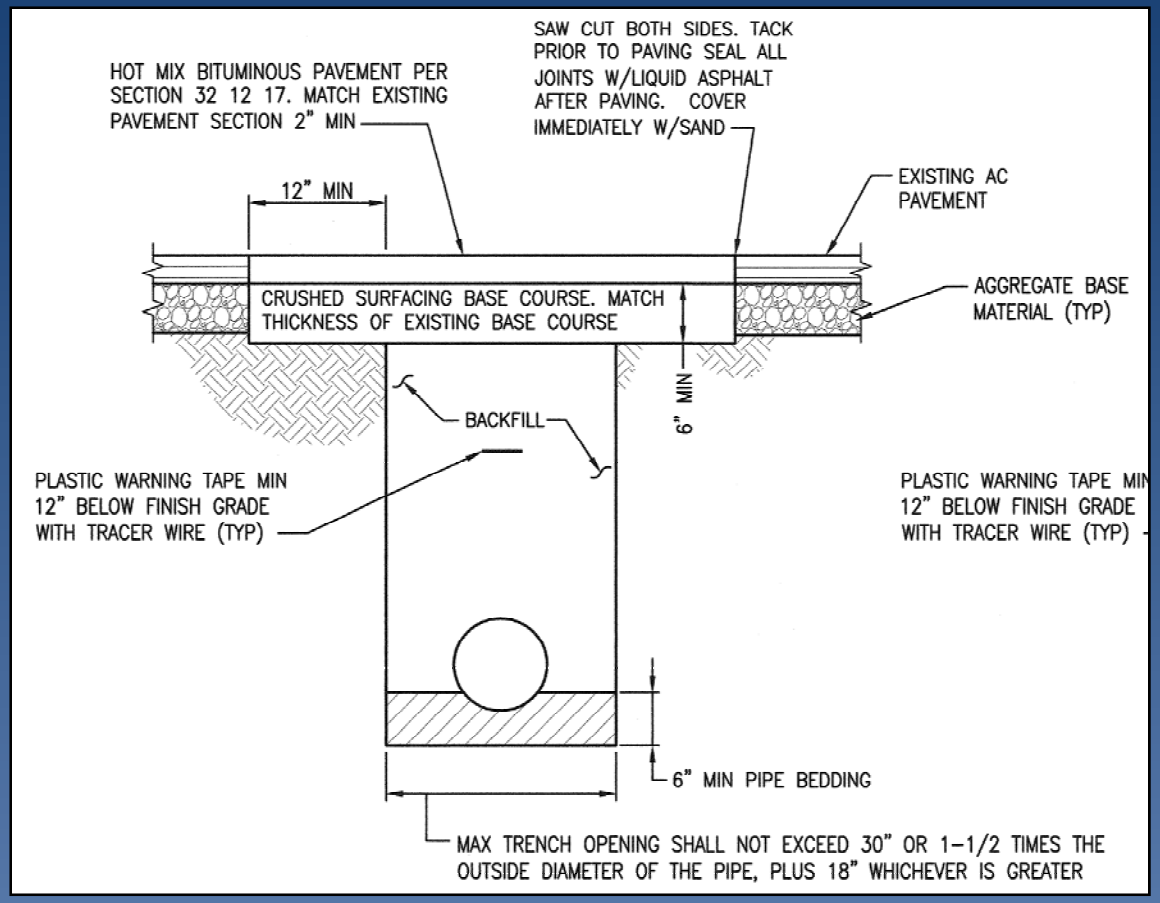

Joint Seal

CLIN 2 – A Sad Wrap Up

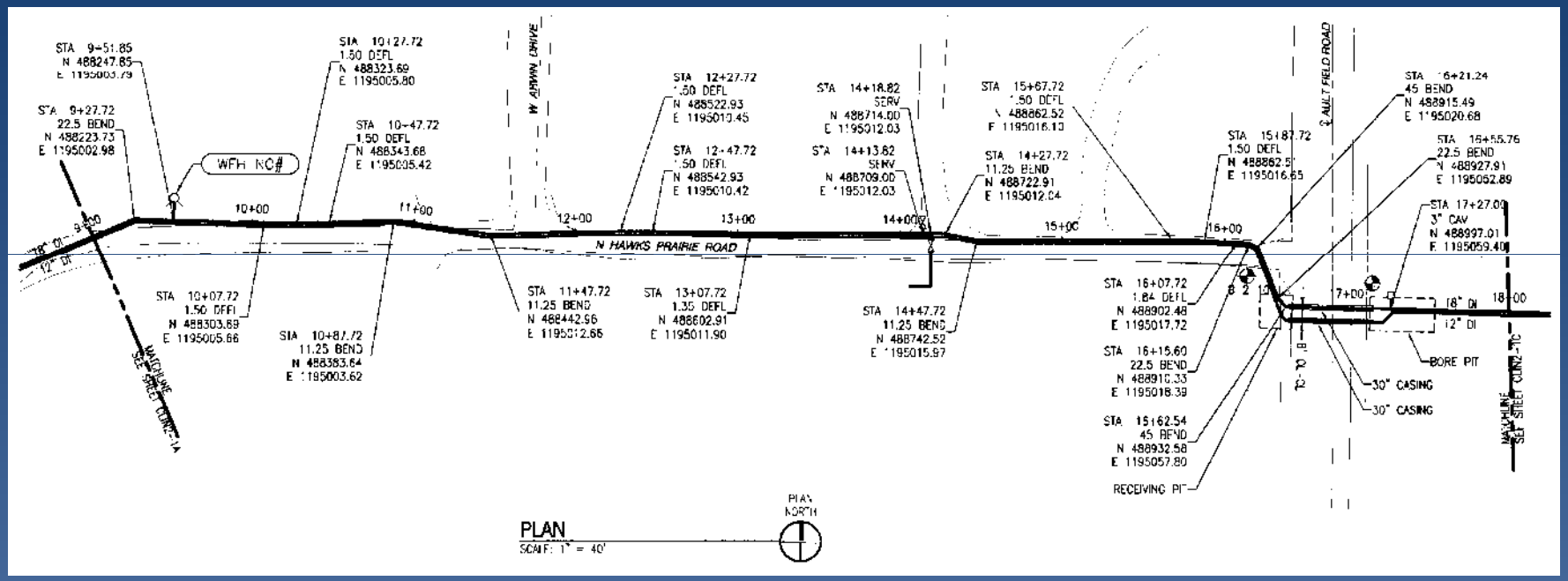

- 900’ section on easement in 20’ wide private road
- Additional communications duct found – existing pipelines location only available space for new pipes

CLIN 2 – Uphill Towards Reservoirs

CLIN 2 – Temporary Supply Alternatives Infeasible

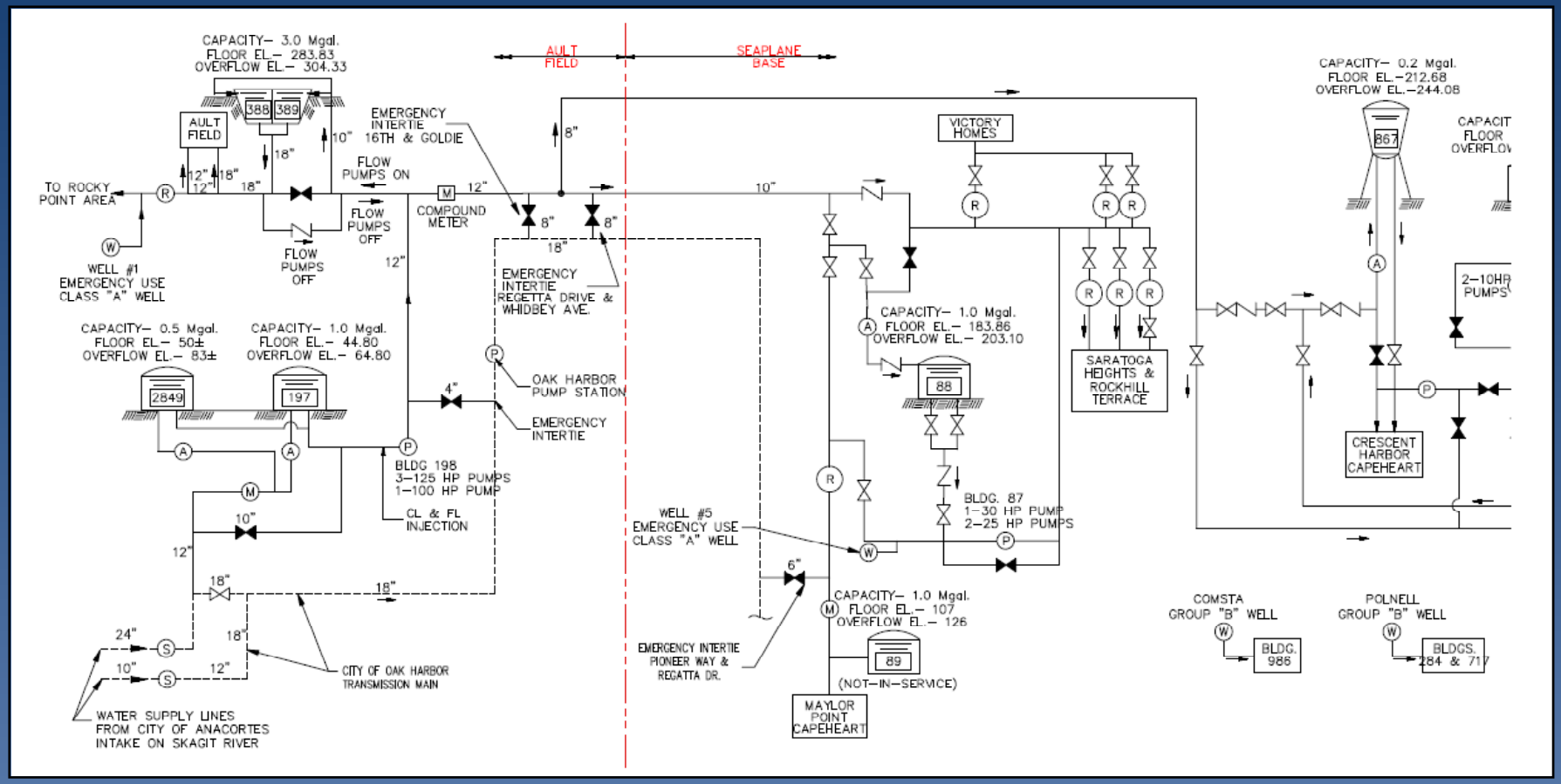

CLIN 2 – Ways to Keep Reservoirs On Line Add Cost

- Trenchless techniques explored
  - HDD
  - Pipe bursting
  - Pipe reaming
- Temporary HDPE lines
- Navy asks for 6-month no cost extension to decommission/move communications line
- Result: **CLIN 2 removed from contract**

Lessons Learned

- Understand the expectations of federal contracting and alternative project delivery
- Know ALL contract requirements and understand the implications of information offered for bidding
- Review the scope of work with the Owner intimately as a first step – at the table and in the field!
- Be prepared for staff turnover

Questions