Fire Hydrant Operation and Maintenance

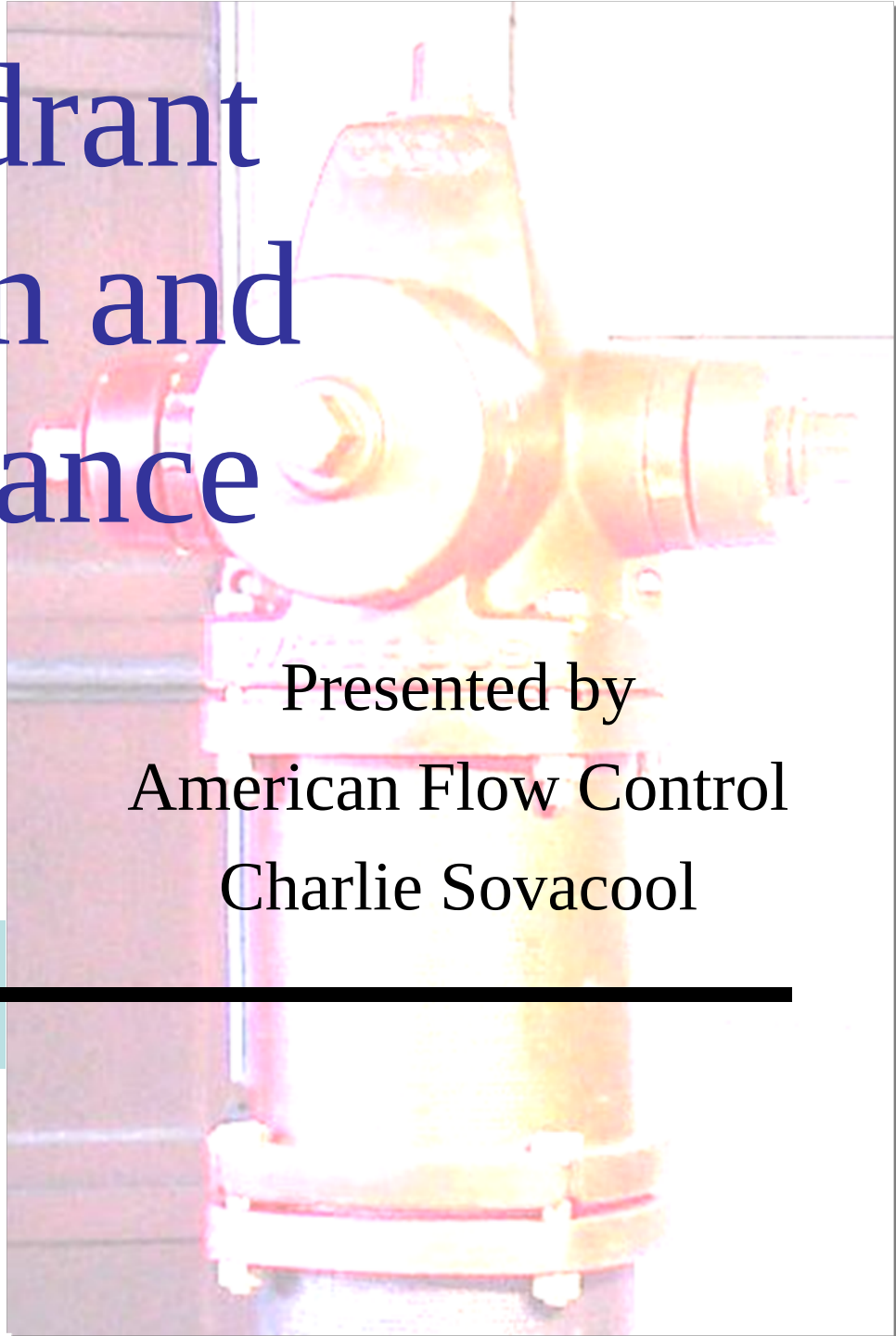

Presented by
American Flow Control
Charlie Sovacool

Agenda

- Hydrant History
- Dry Barrel Nomenclature
  - Types of Dry Barrel Hydrants
- Wet Barrel Nomenclature
- Standards and Specifications
- Inspection and Installation
- Hydrant Security
- Maintenance
- Record Keeping

What is a Hydrant?

- ***Definition – a valving device connected to a water main. Fire hoses can be attached to outlet nozzles which discharge water at a high rate, primarily for fire fighting.***

History of Fire Hydrants

- Wooden Water Pipe
  - As early as mid 1600's
  - Fire Plug

- Cast Iron Water Pipe
  - Early 1800's

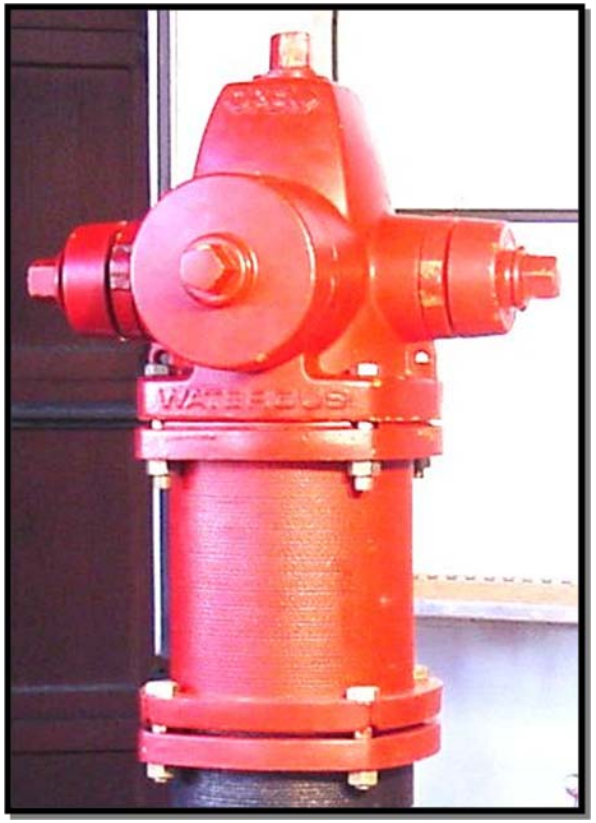

History of Fire Hydrants (cont.)

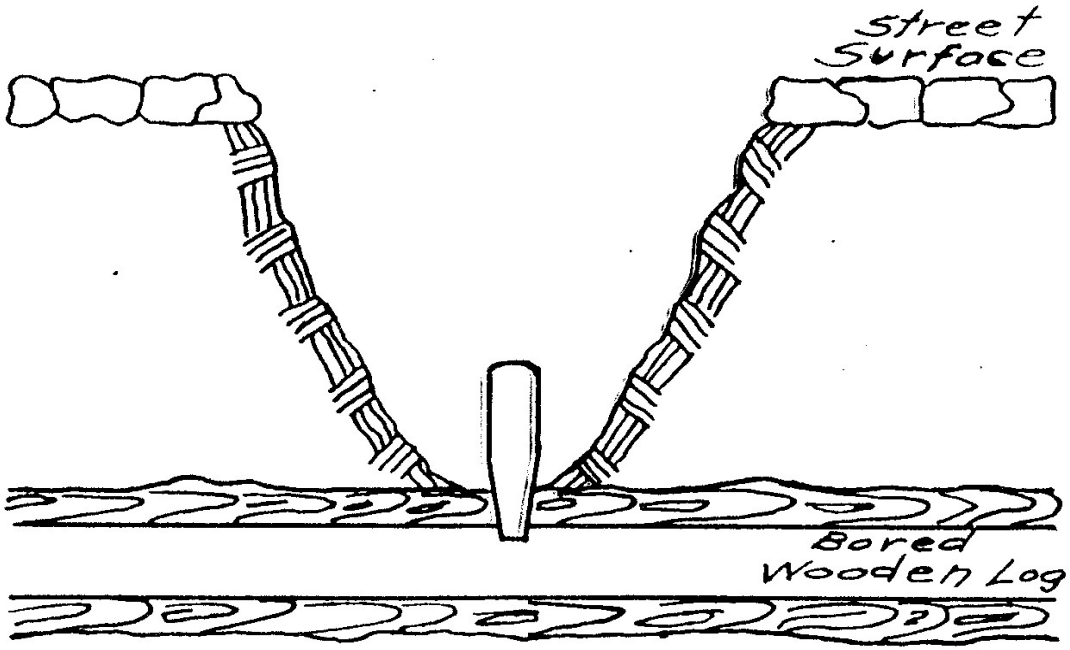

History of Fire Hydrants (cont.)

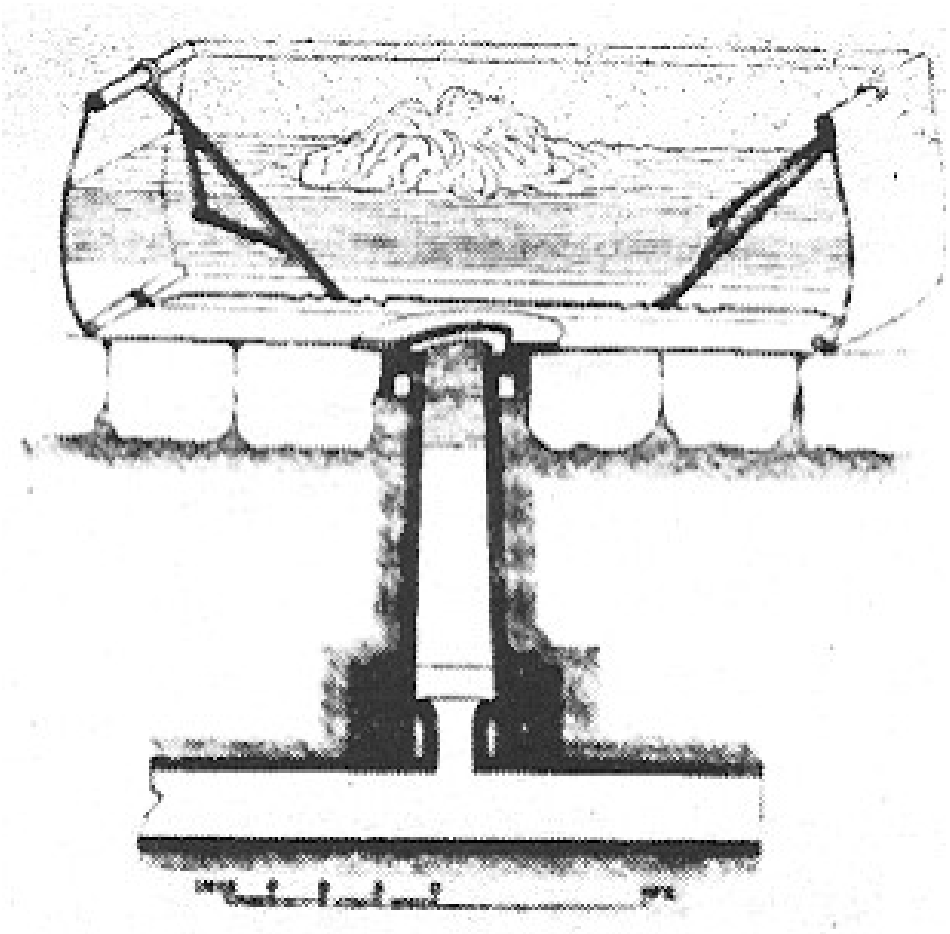

History of Fire Hydrants (cont.)

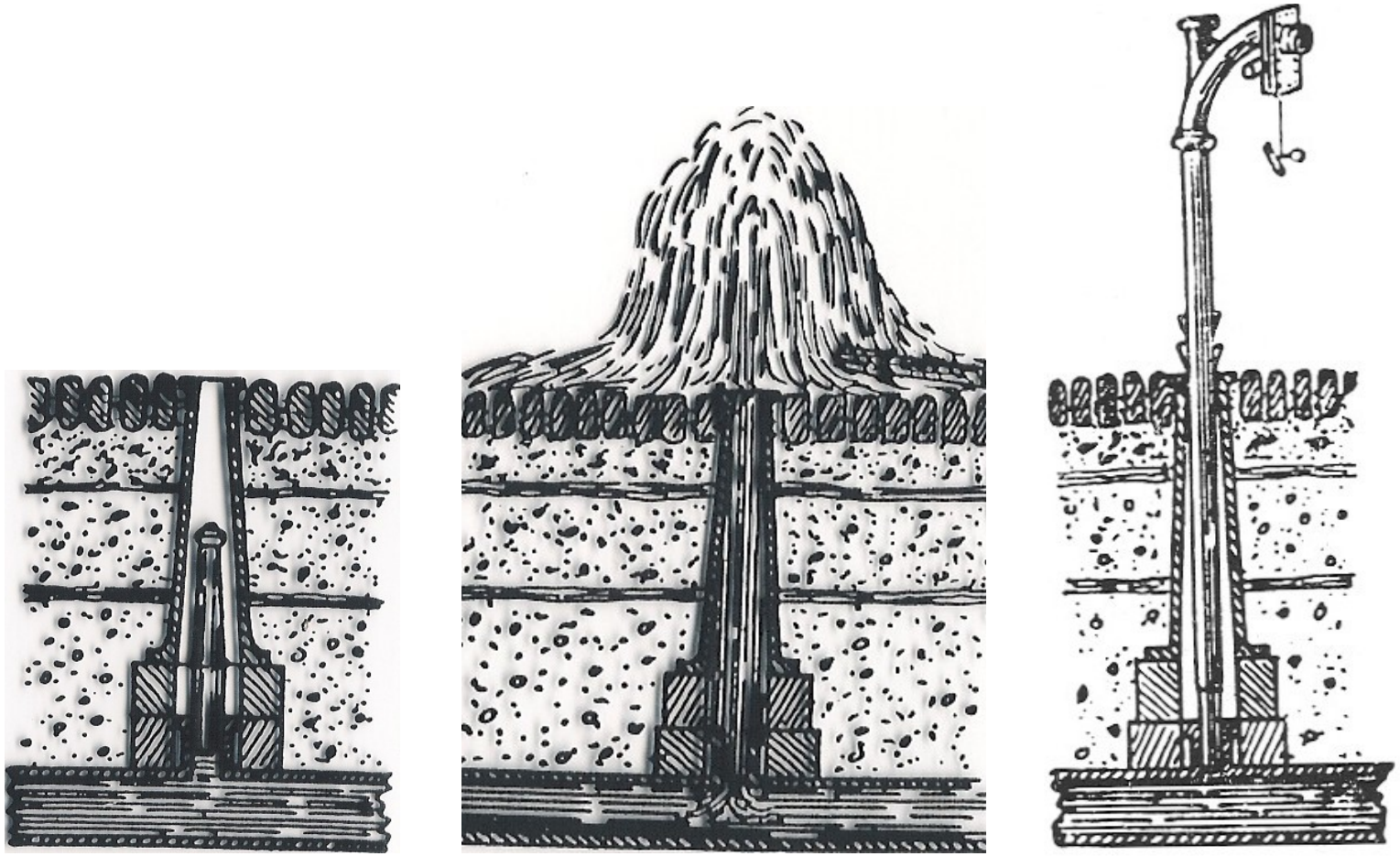

Historical Hydrants

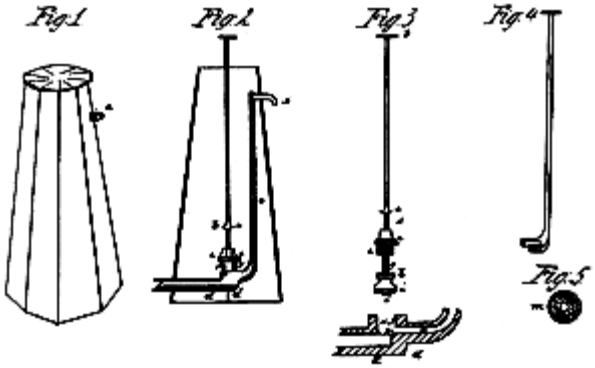

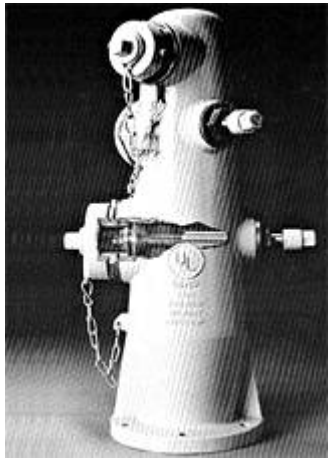

Dry Barrel Fire Hydrants

- Nomenclature
  - Upper Barrel Components
  - Lower Barrel Components
- Types of Valve Closure and Component Names
  - Compression closing with the pressure
  - Compression closing against the pressure
  - Toggle or Scissor
  - Slide-Gate
- AWWA C502

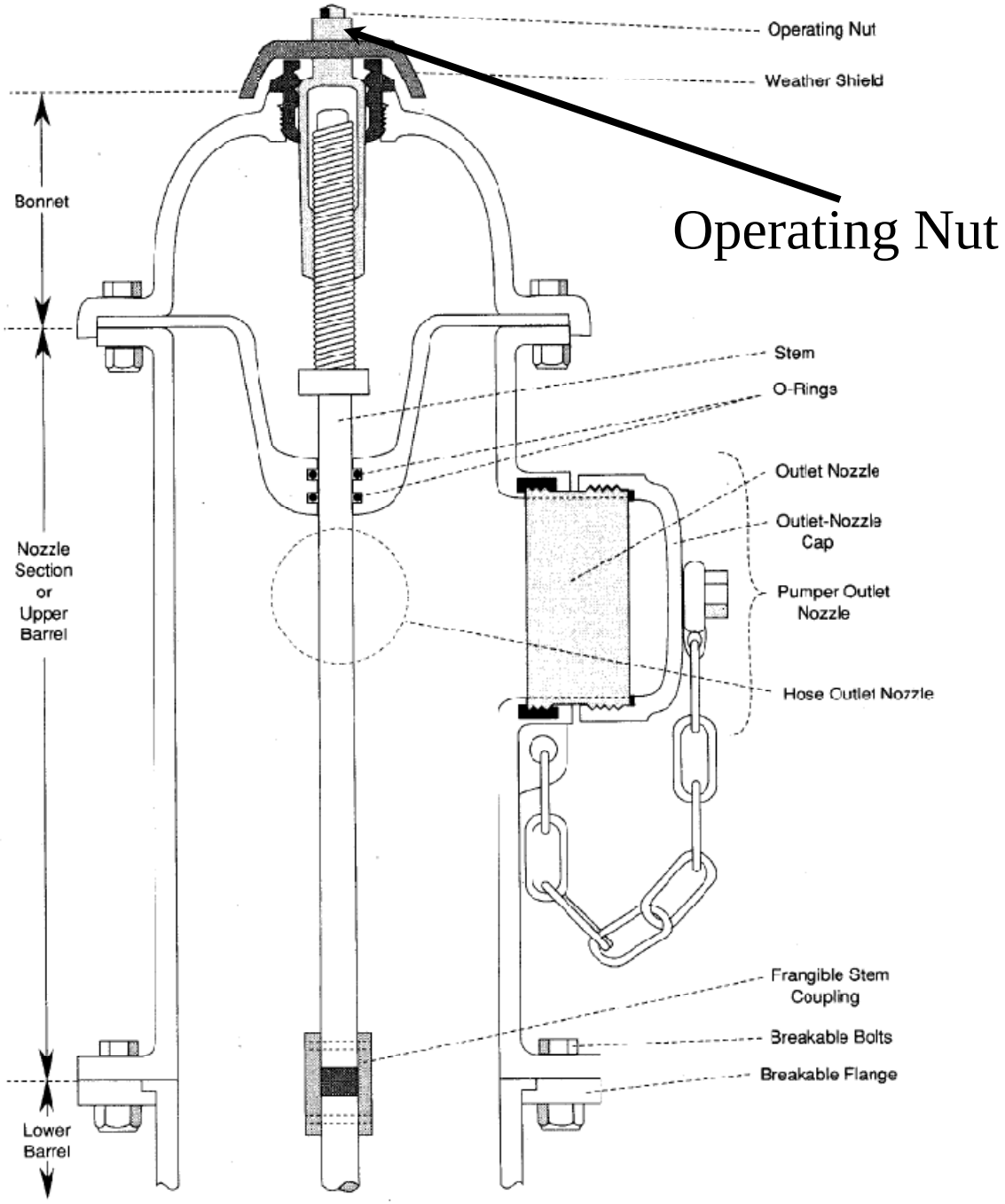
Operating Nut
Weather Shield
Operating Nut
Bonnet
Stem
O-Rings
Outlet Nozzle
Outlet-Nozzle Cap
Pumper Outlet Nozzle
Nozzle Section or Upper Barrel
Hose Outlet Nozzle
Frangible Stem Coupling
Breakable Bolts
Breakable Flange
Lower Barrel

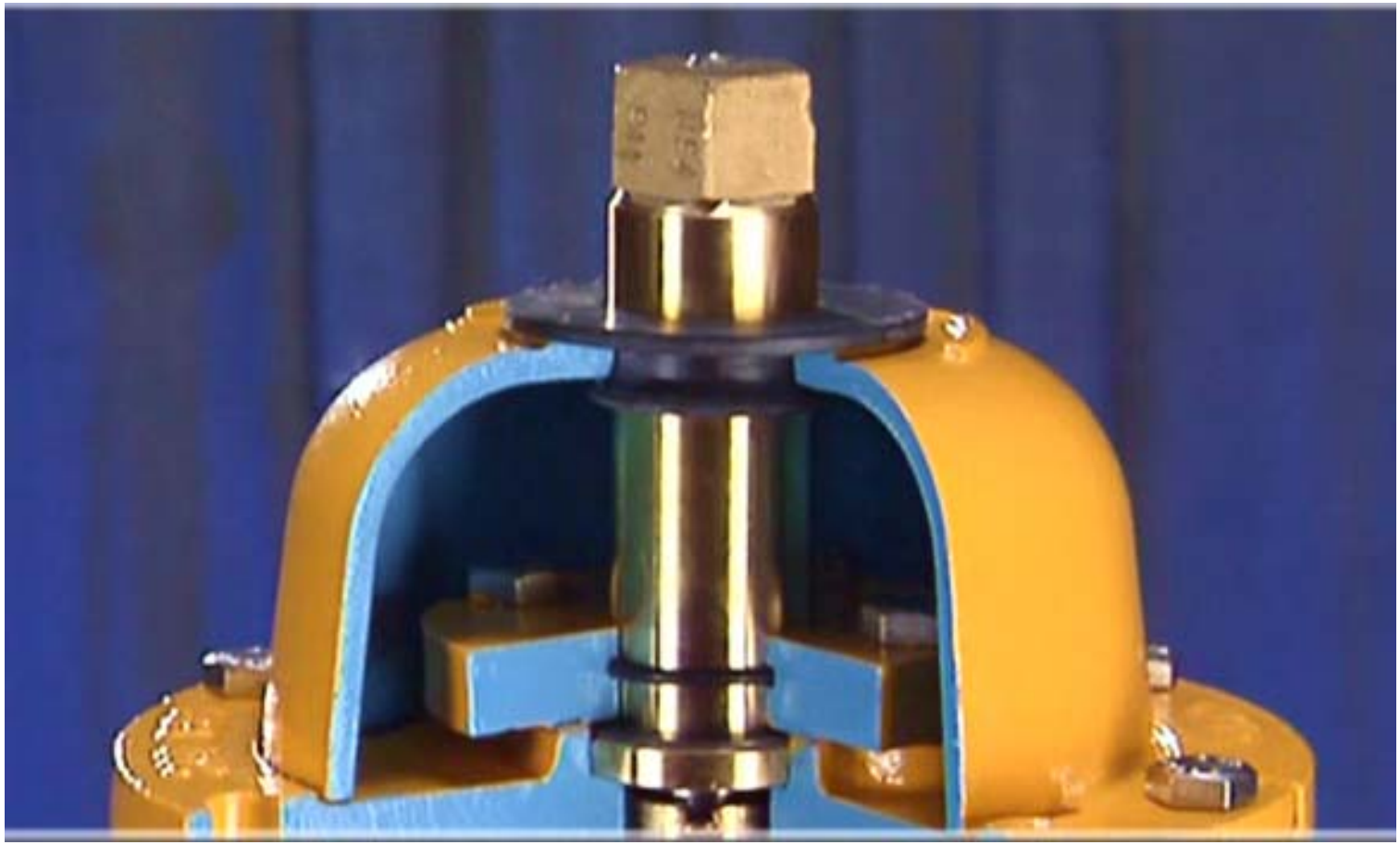

Fire Hydrant Anatomy

Operating nut

- Five-sided nut is NST 1 ½”
- Different threads

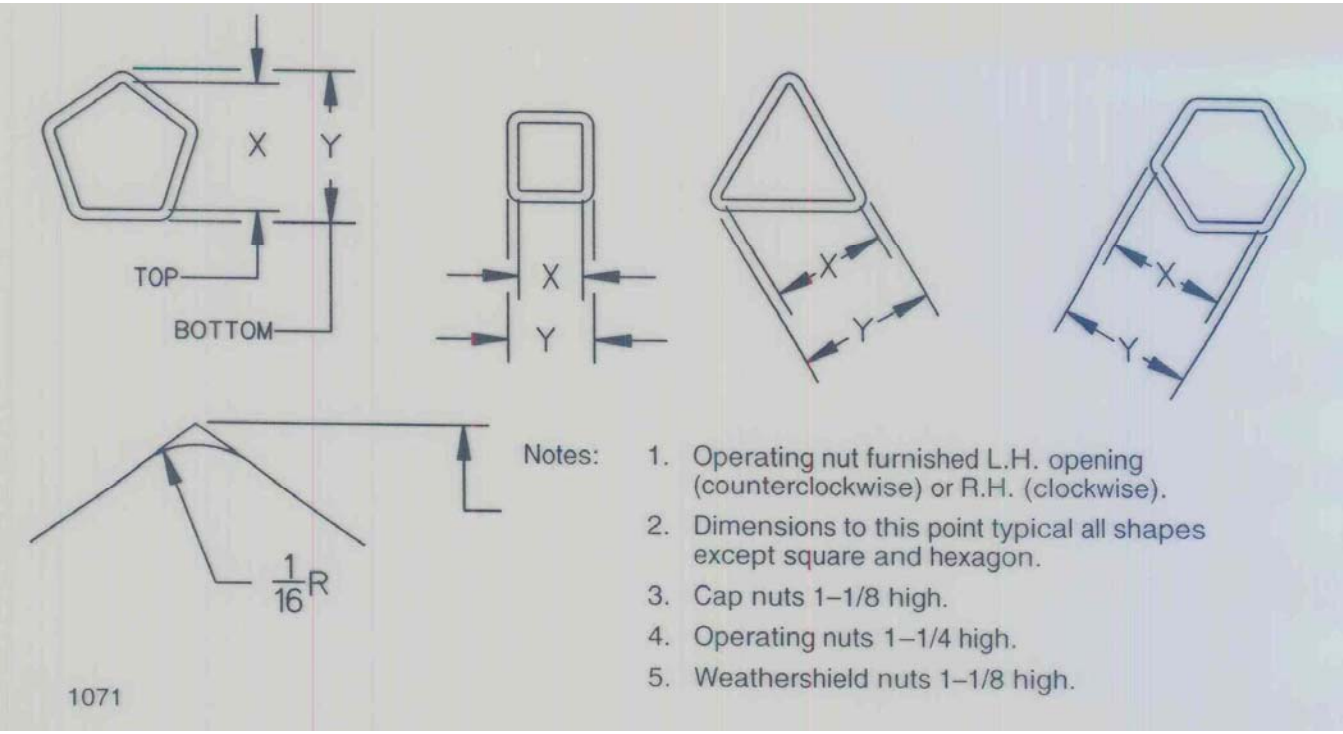

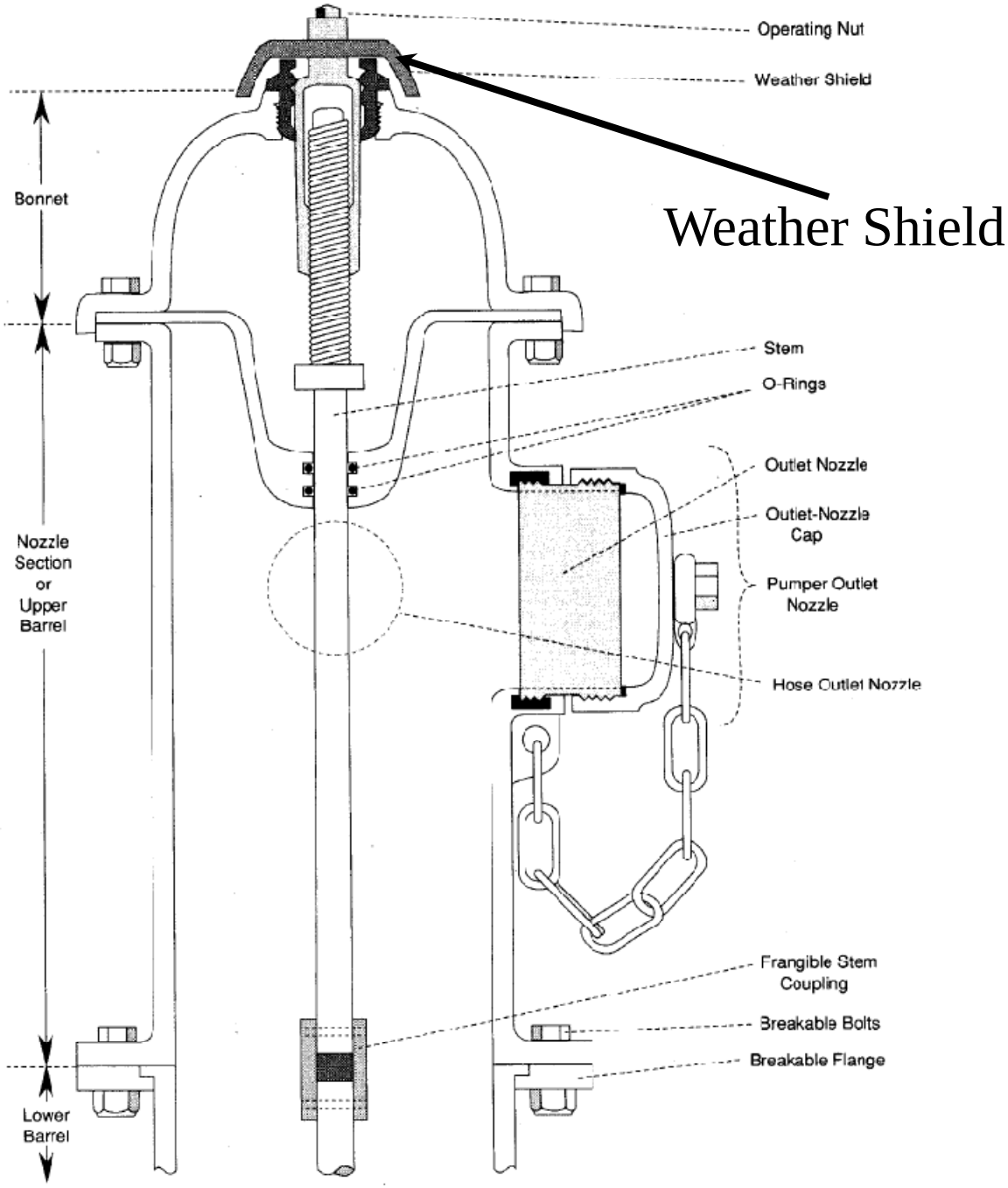
Operating Nut
Weather Shield
Weather Shield
Bonnet
Stem
O-Rings
Outlet Nozzle
Outlet-Nozzle Cap
Pumper Outlet Nozzle
Hose Outlet Nozzle
Nozzle Section or Upper Barrel
Frangible Stem Coupling
Breakable Bolts
Breakable Flange
Lower Barrel

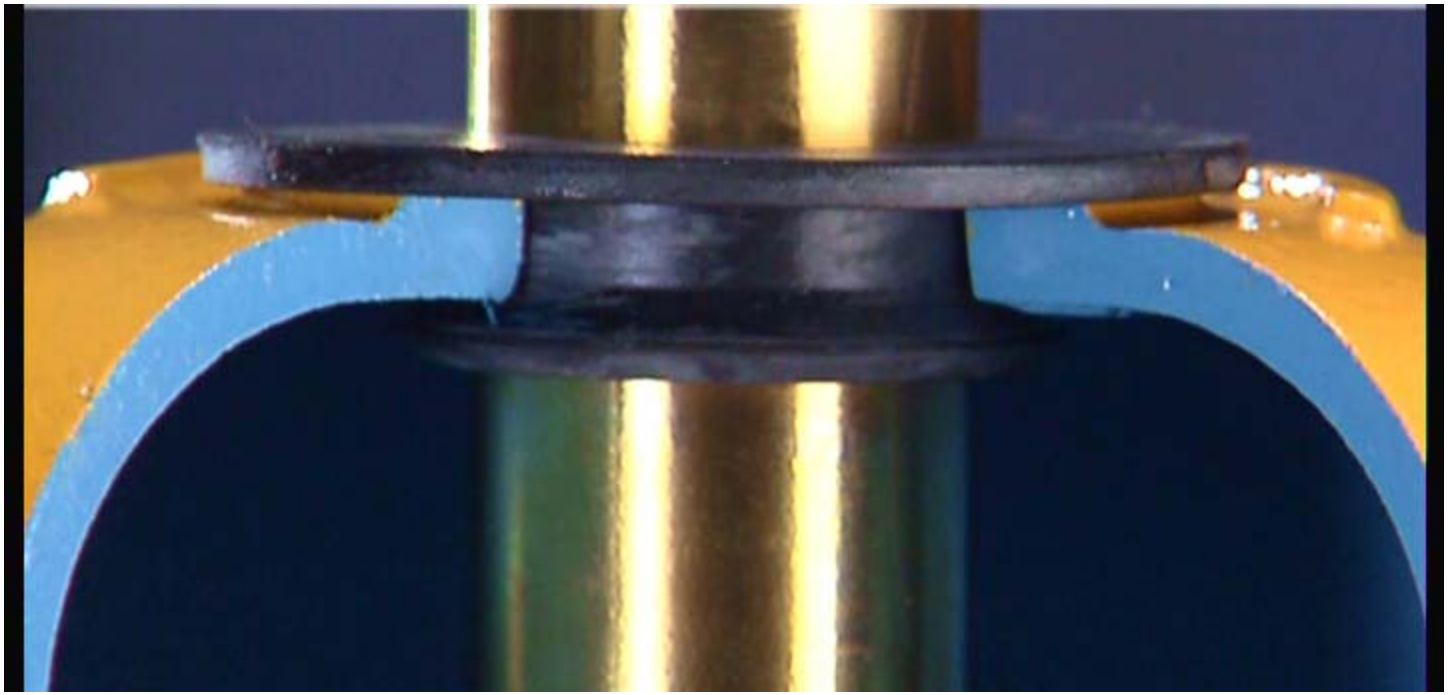

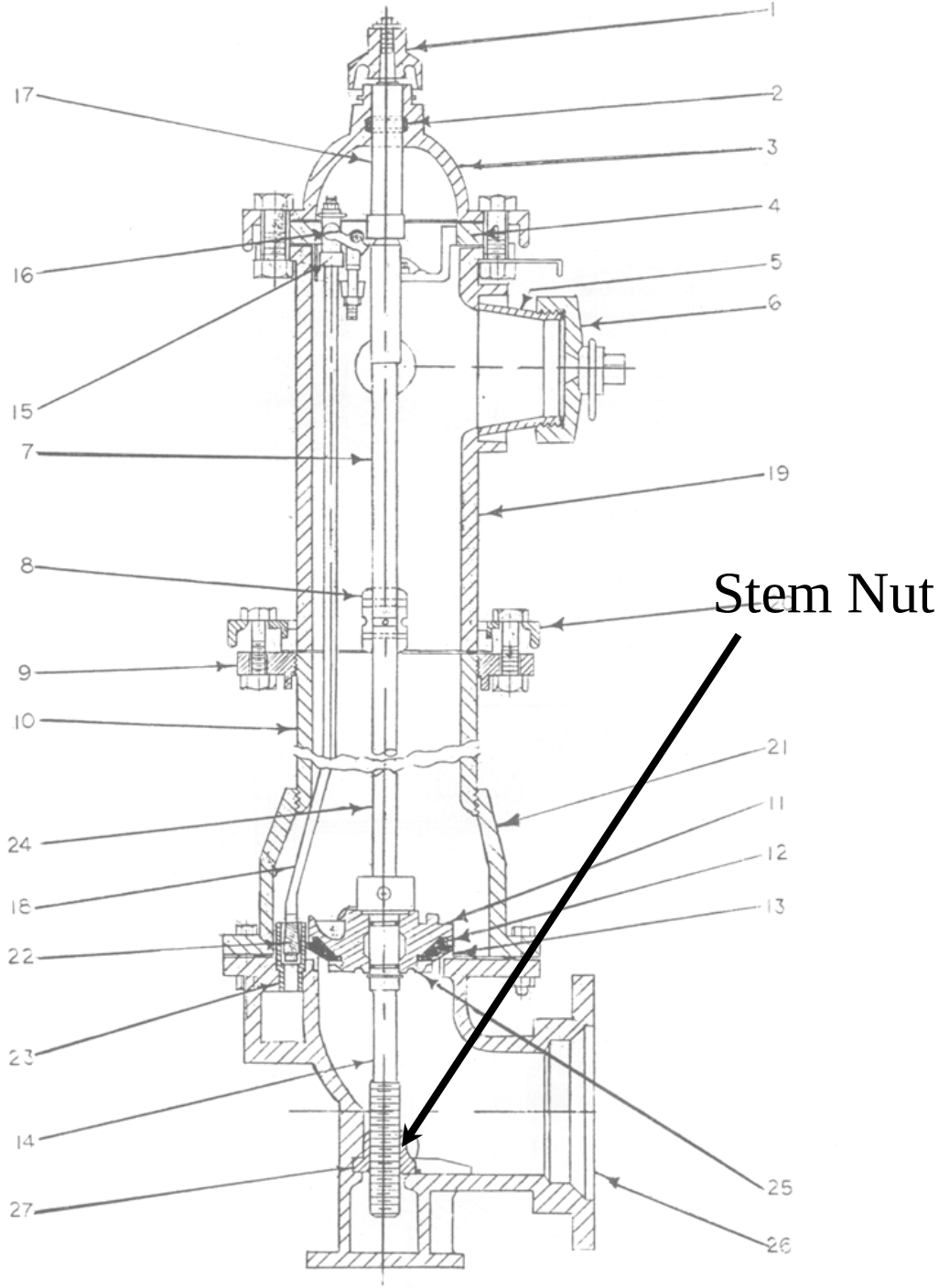
1
2
3
4
5
6
17
16
15
7
19
8
Stem Nut
9
10
21
11
24
12
18
13
22
23
14
25
27
26

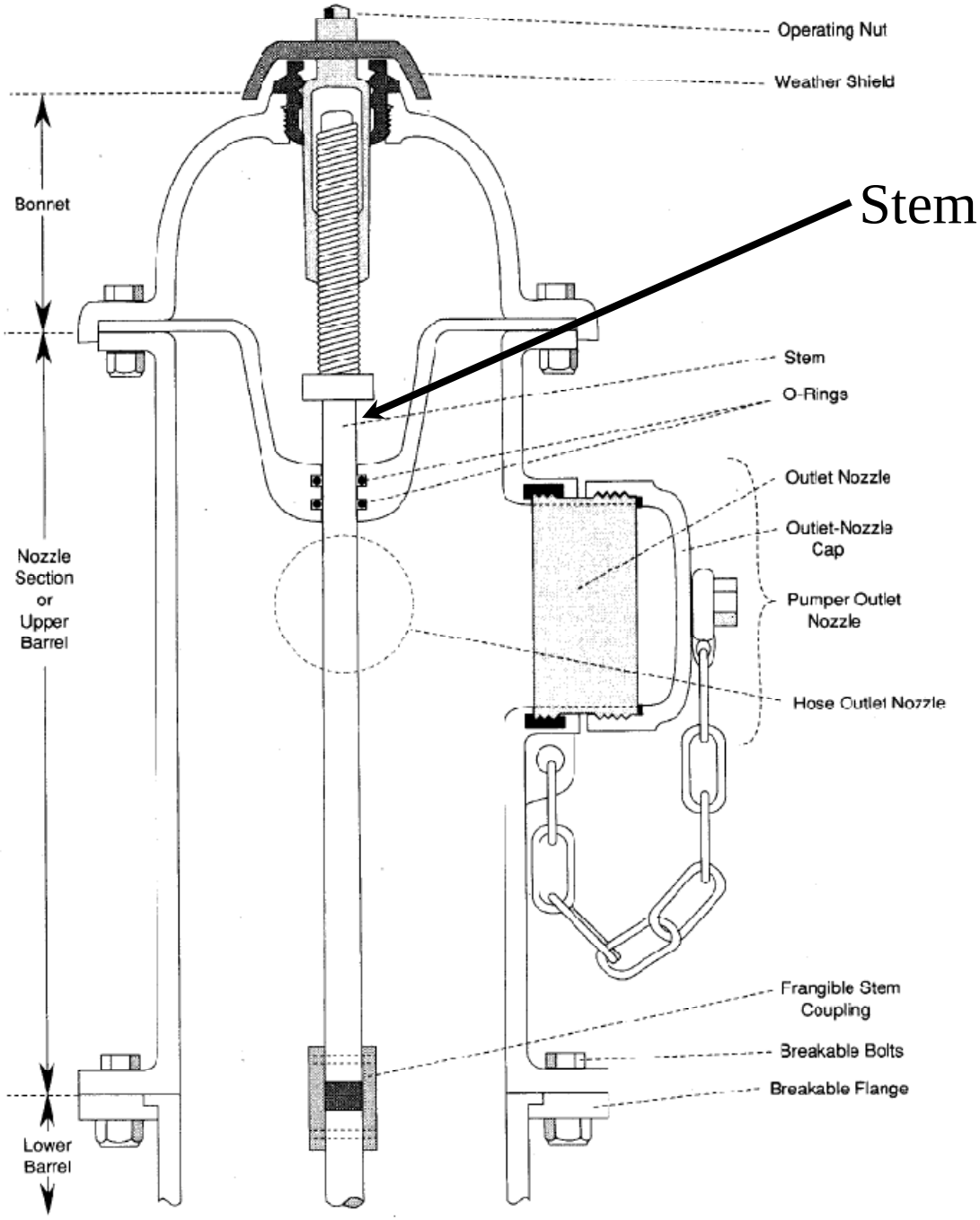
Operating Nut
Weather Shield
Stem
Bonnet
Stem
O-Rings
Outlet Nozzle
Outlet-Nozzle Cap
Pumper Outlet Nozzle
Nozzle Section or Upper Barrel
Hose Outlet Nozzle
Frangible Stem Coupling
Breakable Bolts
Breakable Flange
Lower Barrel

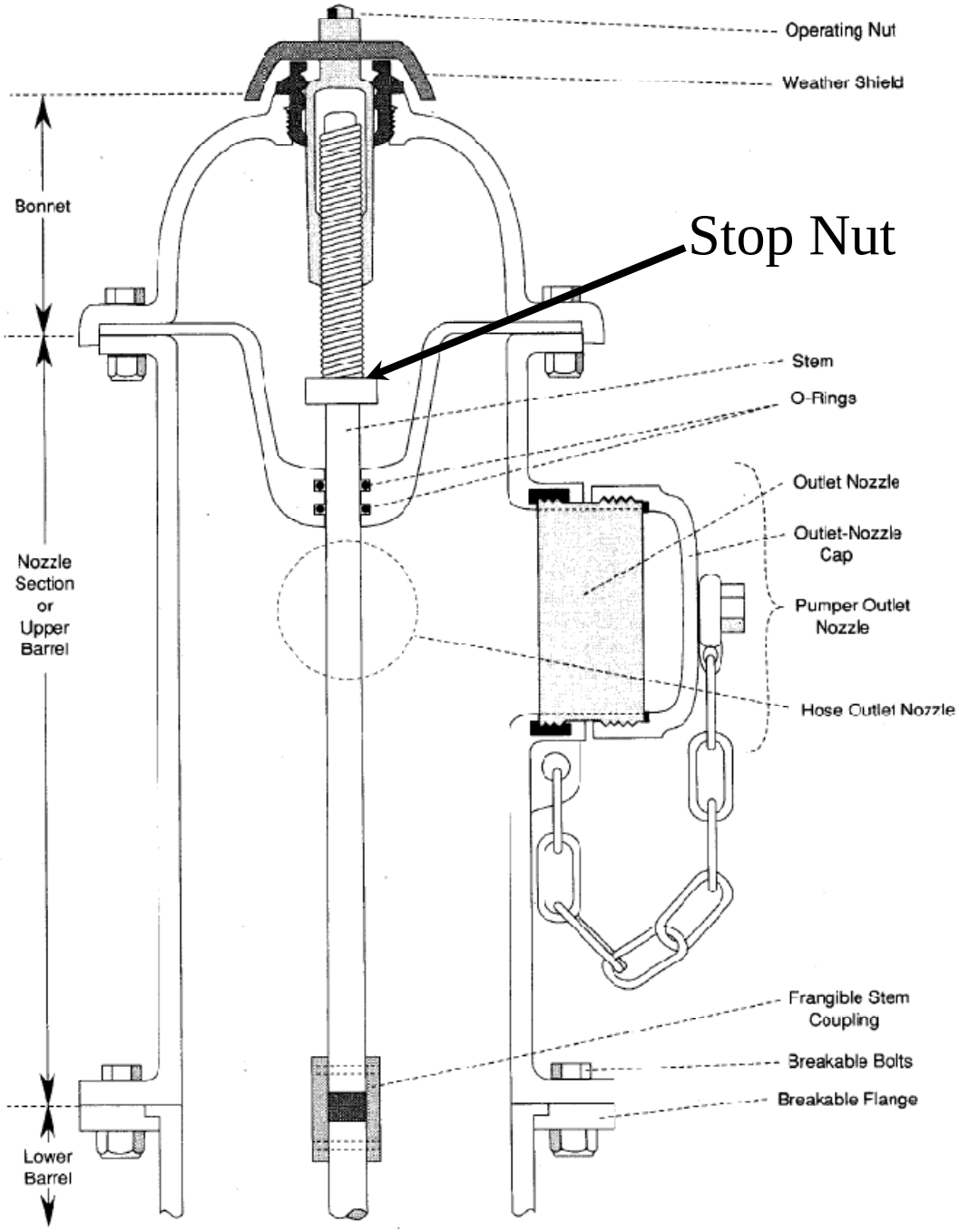
Operating Nut
Weather Shield
Bonnet
Stop Nut
Stem
O-Rings
Outlet Nozzle
Outlet-Nozzle Cap
Pumper Outlet Nozzle
Hose Outlet Nozzle
Nozzle Section or Upper Barrel
Frangible Stem Coupling
Breakable Bolts
Breakable Flange
Lower Barrel

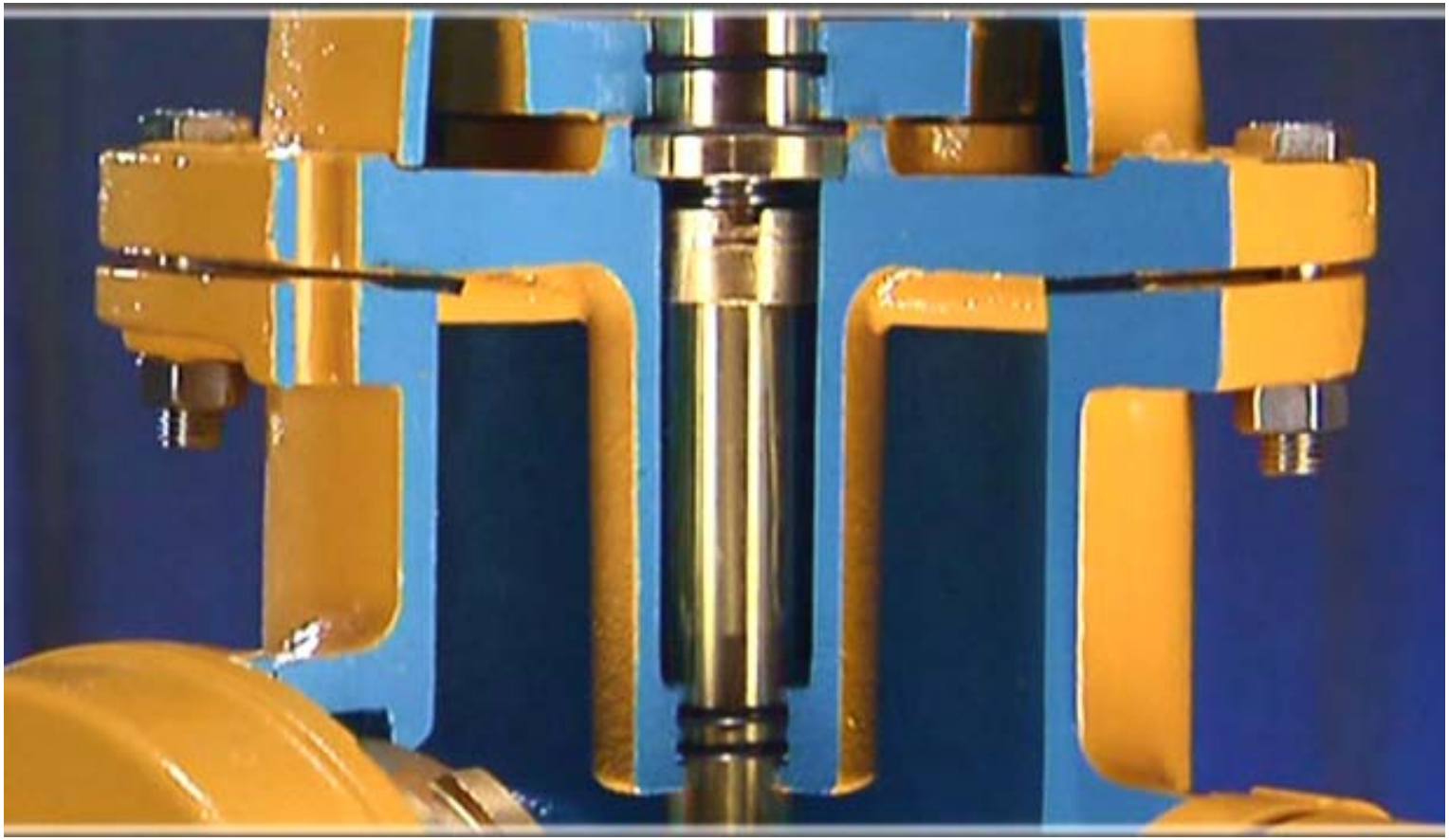

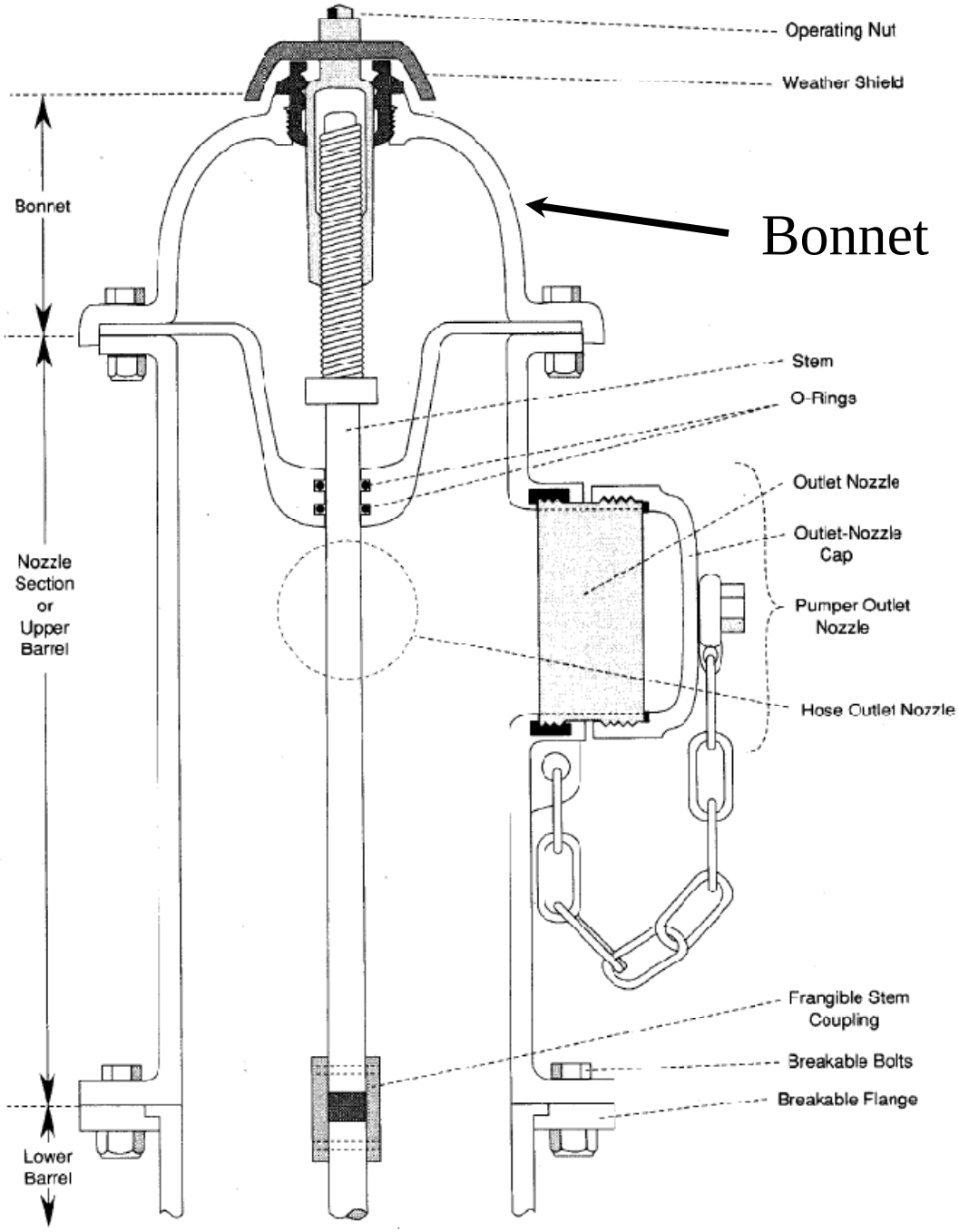
Operating Nut
Weather Shield
Bonnet
Bonnet
Stem
O-Rings
Outlet Nozzle
Outlet-Nozzle Cap
Pumper Outlet Nozzle
Hose Outlet Nozzle
Nozzle Section or Upper Barrel
Frangible Stem Coupling
Breakable Bolts
Breakable Flange
Lower Barrel

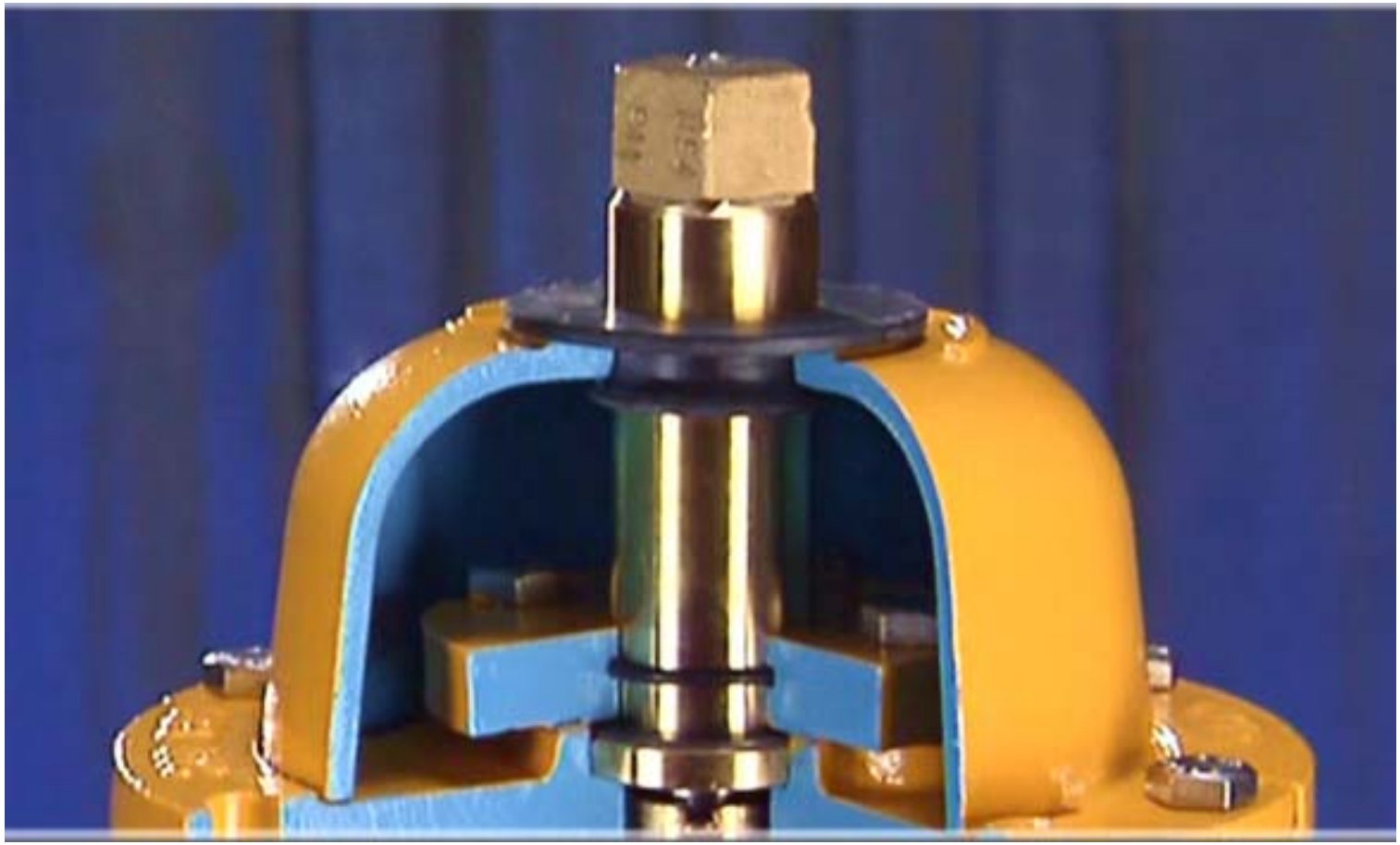

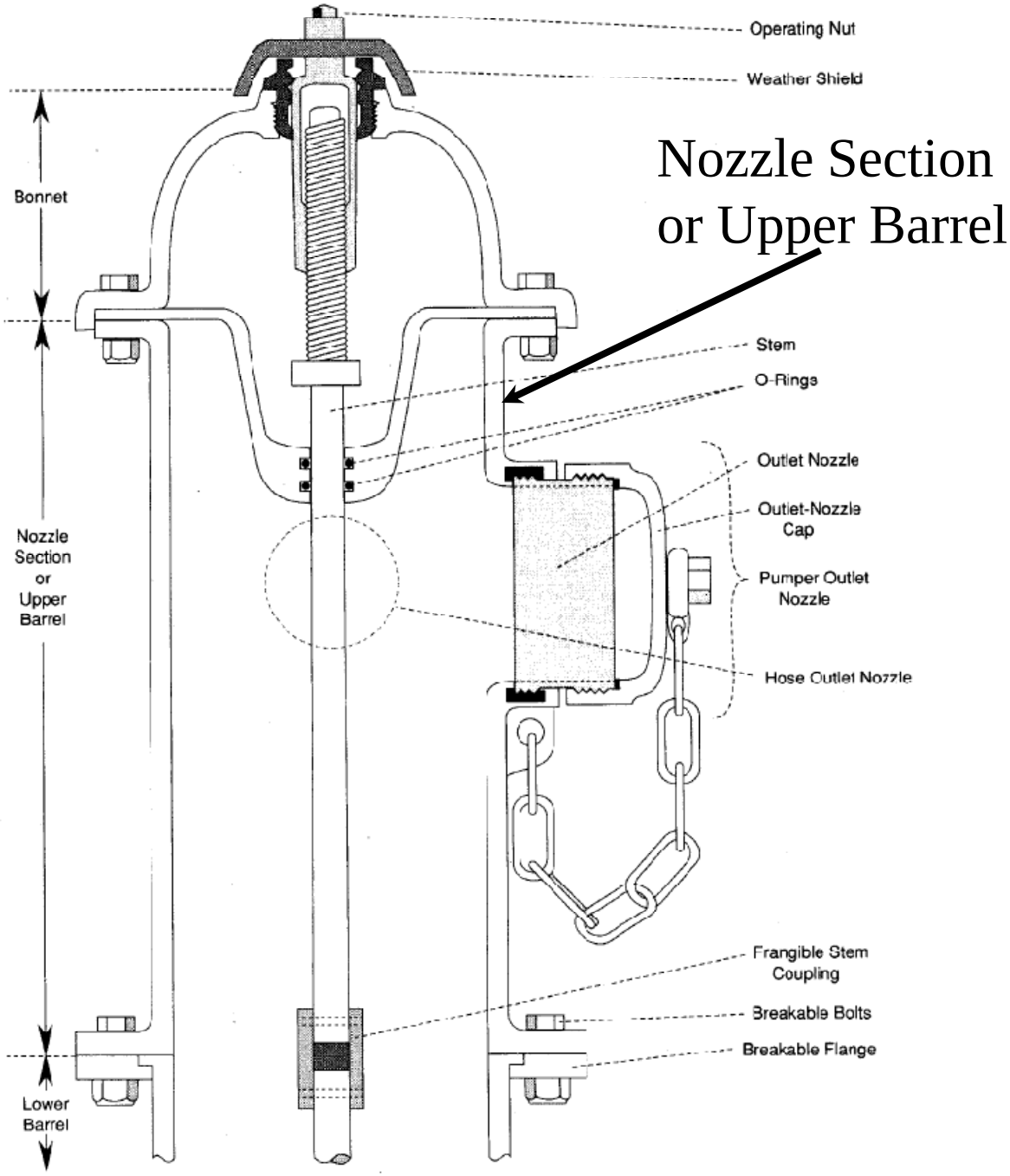
Operating Nut
Weather Shield
Nozzle Section
or Upper Barrel
Bonnet
Stem
O-Rings
Outlet Nozzle
Outlet-Nozzle
Cap
Pumper Outlet
Nozzle
Nozzle
Section
or
Upper
Barrel
Hose Outlet Nozzle
Frangible Stem
Coupling
Breakable Bolts
Breakable Flange
Lower
Barrel

OPEN

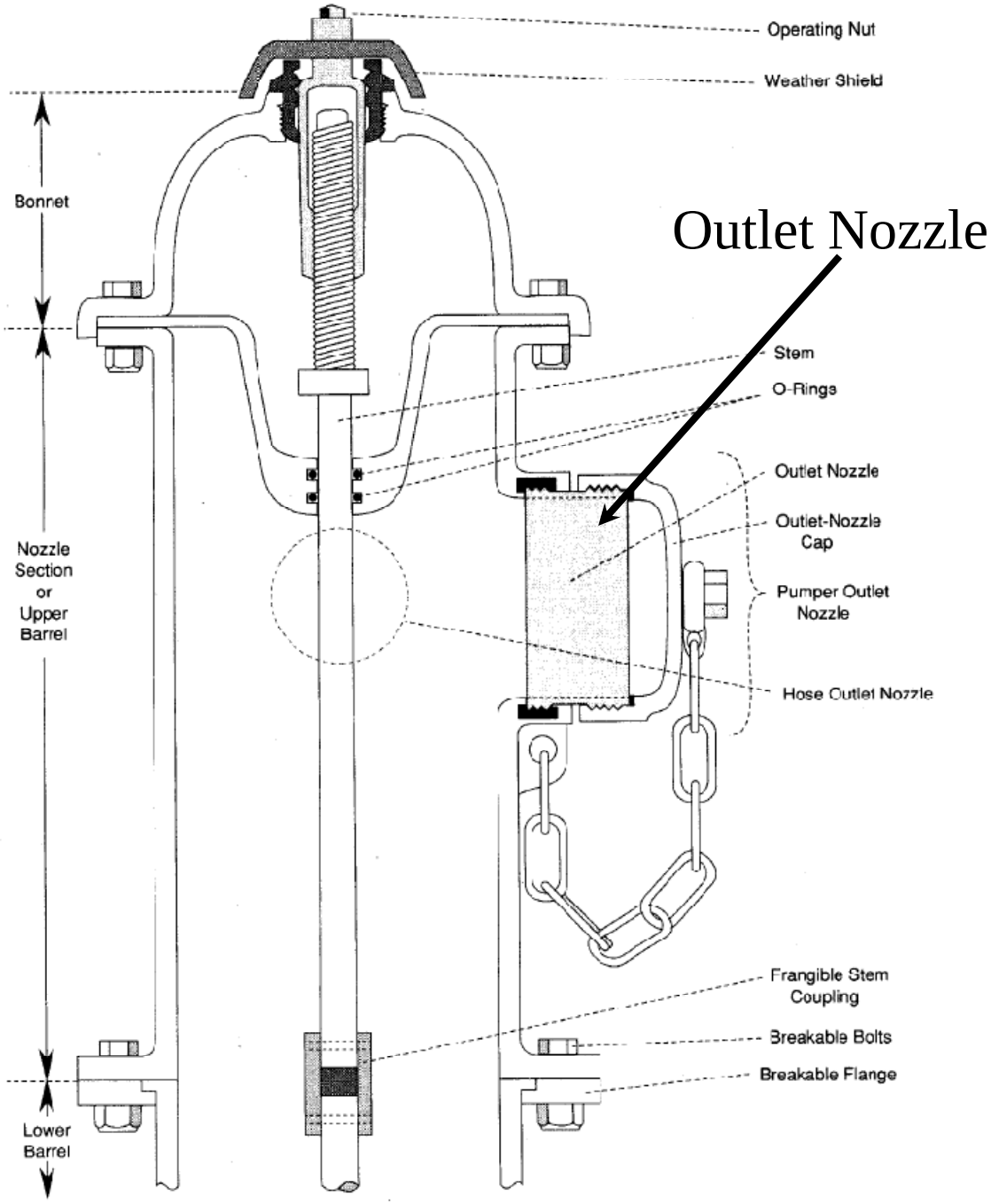
Operating Nut
Weather Shield
Bonnet
Outlet Nozzle
Stem
O-Rings
Outlet Nozzle
Outlet-Nozzle Cap
Pumper Outlet Nozzle
Nozzle Section or Upper Barrel
Hose Outlet Nozzle
Frangible Stem Coupling
Breakable Bolts
Breakable Flange
Lower Barrel

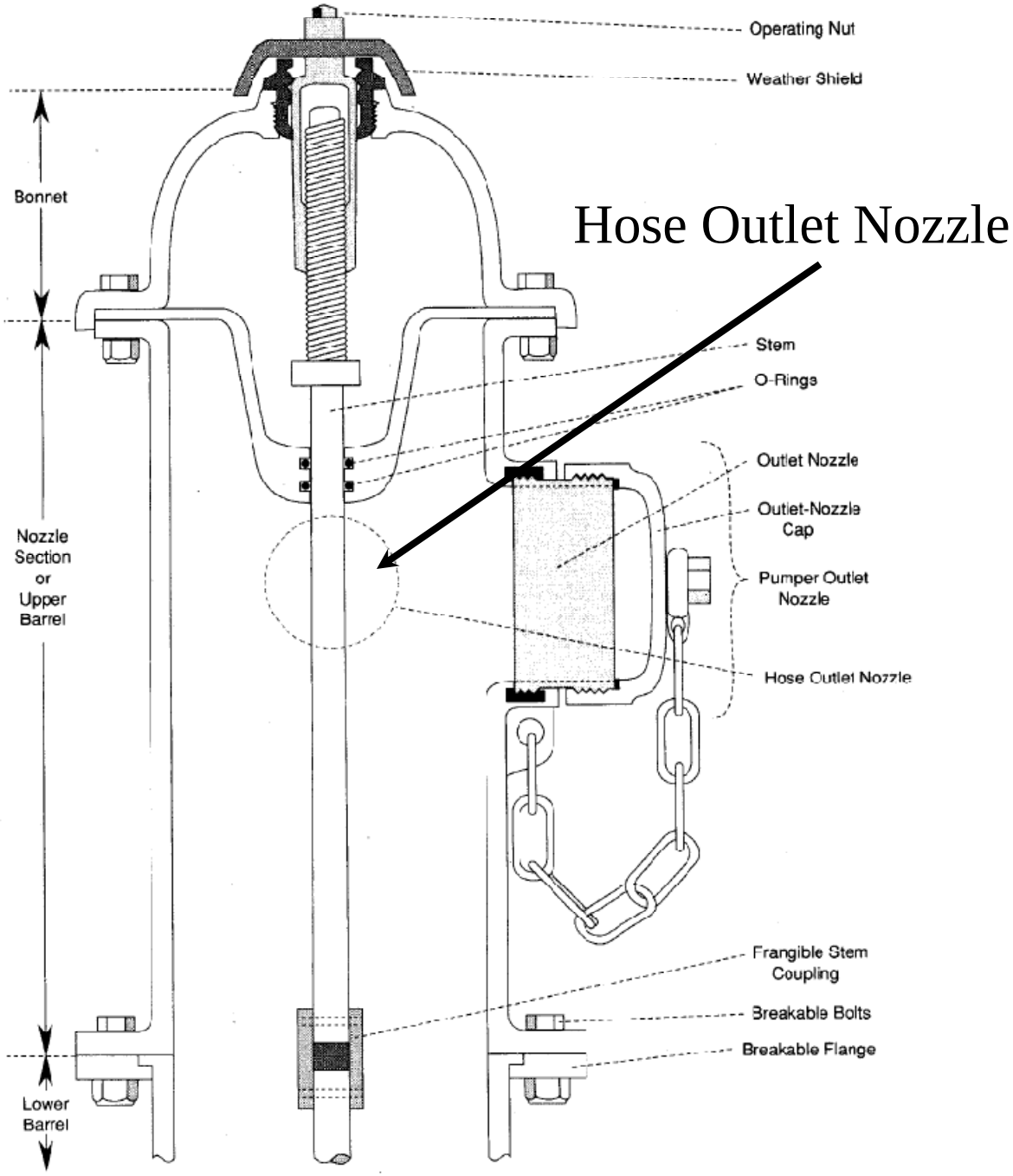
Operating Nut
Weather Shield
Bonnet
Hose Outlet Nozzle
Stem
O-Rings
Outlet Nozzle
Outlet-Nozzle Cap
Pumper Outlet Nozzle
Nozzle Section or Upper Barrel
Hose Outlet Nozzle
Frangible Stem Coupling
Breakable Bolts
Breakable Flange
Lower Barrel

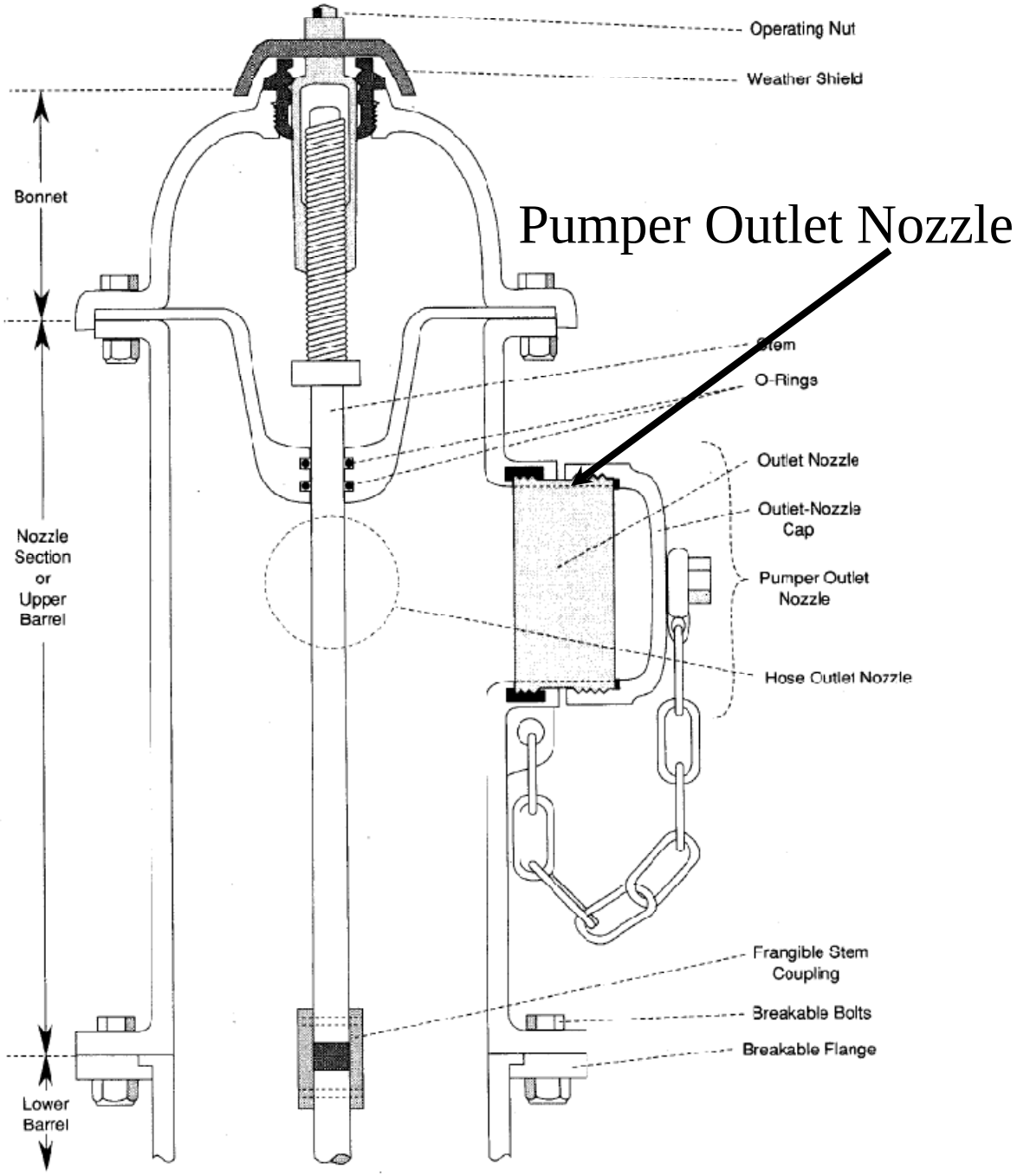
Operating Nut
Weather Shield
Bonnet
Pumper Outlet Nozzle
Stem
O-Rings
Outlet Nozzle
Outlet-Nozzle Cap
Pumper Outlet Nozzle
Nozzle Section or Upper Barrel
Hose Outlet Nozzle
Frangible Stem Coupling
Breakable Bolts
Breakable Flange
Lower Barrel

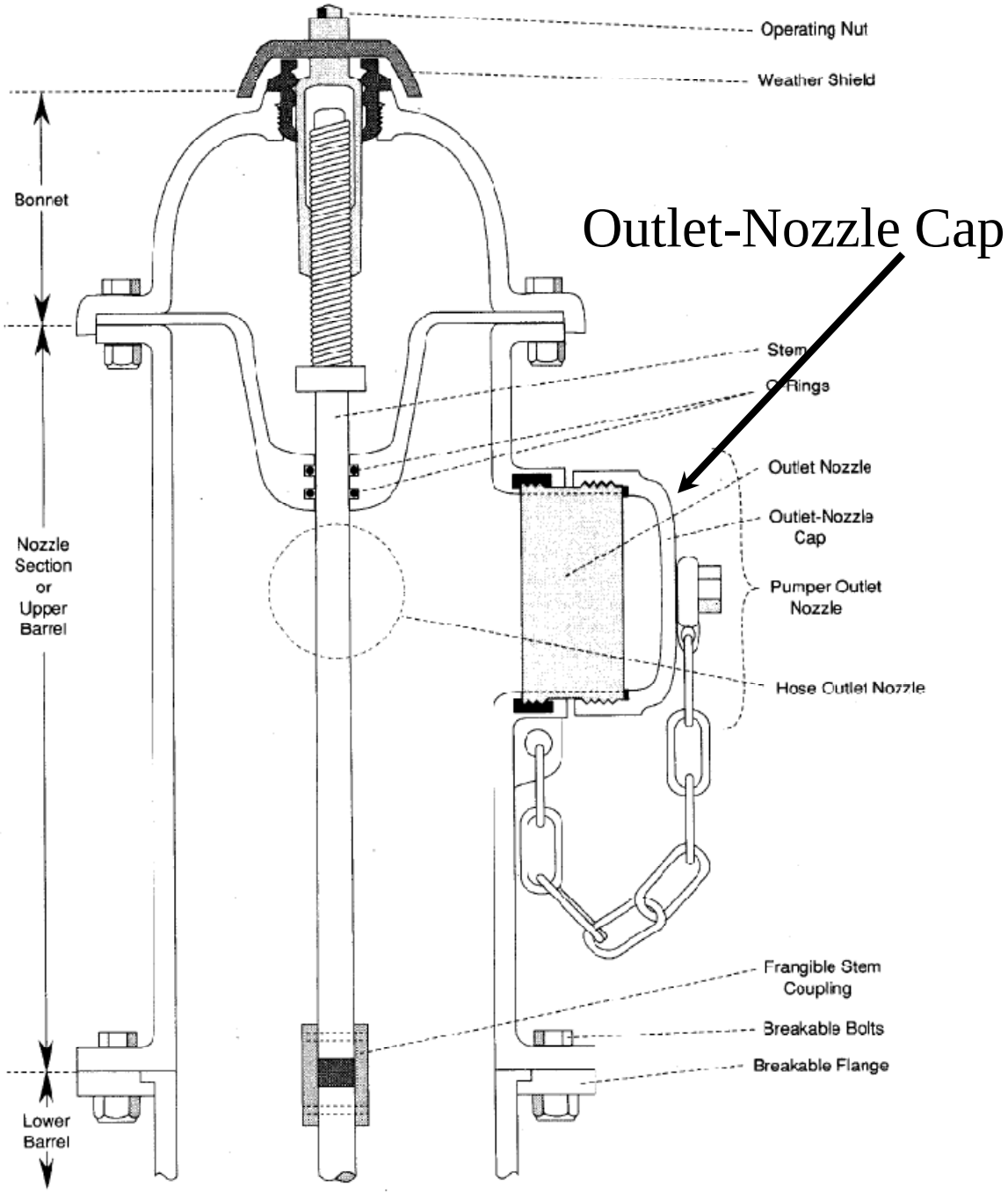
Operating Nut
Weather Shield
Bonnet
Outlet-Nozzle Cap
Stem
O-Rings
Outlet Nozzle
Outlet-Nozzle Cap
Pumper Outlet Nozzle
Nozzle Section or Upper Barrel
Hose Outlet Nozzle
Frangible Stem Coupling
Breakable Bolts
Breakable Flange
Lower Barrel

Fire Hydrant Anatomy

Barrel &Nozzles

- Variety of sizes and configurations
- Pumper nozzle – Varies 4 ½ - 5 1/4” ID
- Outlet nozzles – 2 ½” ID typical
- Barrel length depends on frost depth

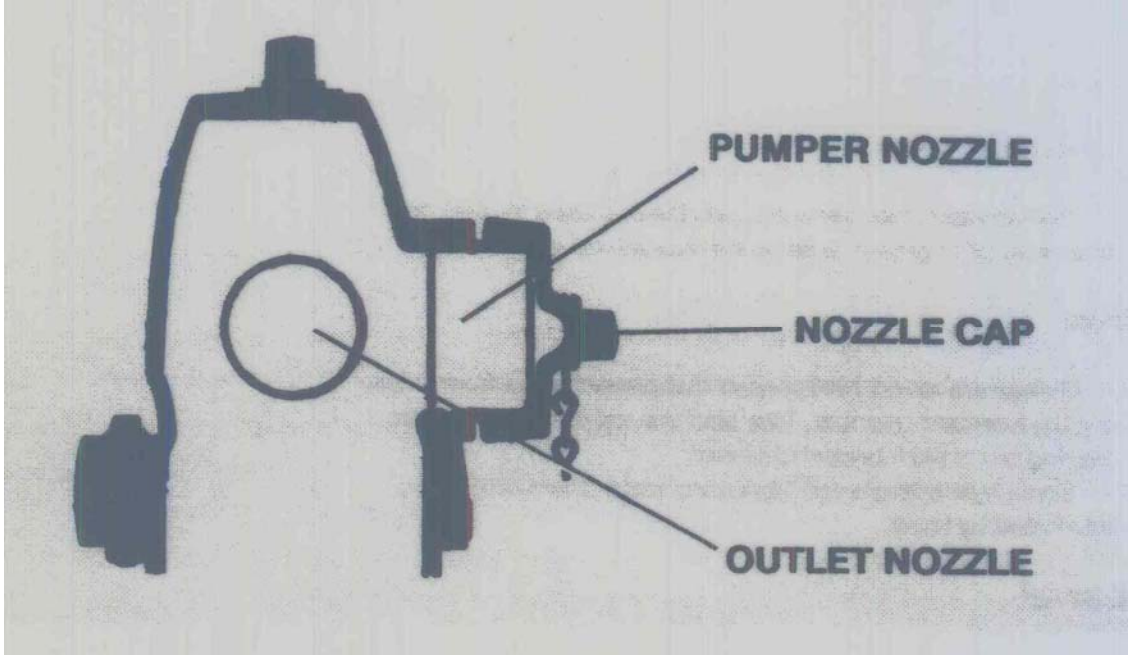

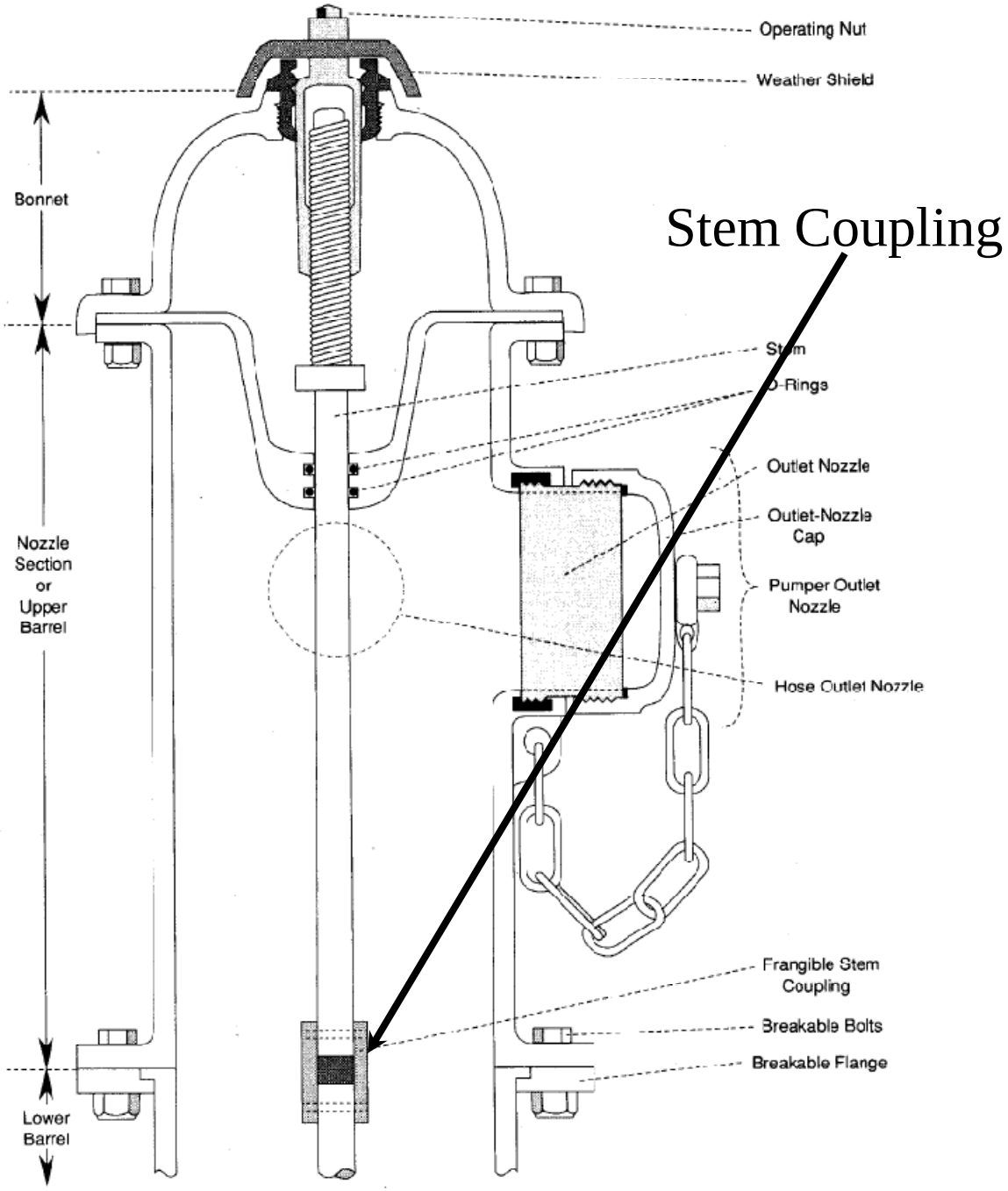
Operating Nut
Weather Shield
Bonnet
Stem Coupling
Stem
O-Rings
Outlet Nozzle
Outlet-Nozzle Cap
Pumper Outlet Nozzle
Hose Outlet Nozzle
Nozzle Section or Upper Barrel
Frangible Stem Coupling
Breakable Bolts
Breakable Flange
Lower Barrel

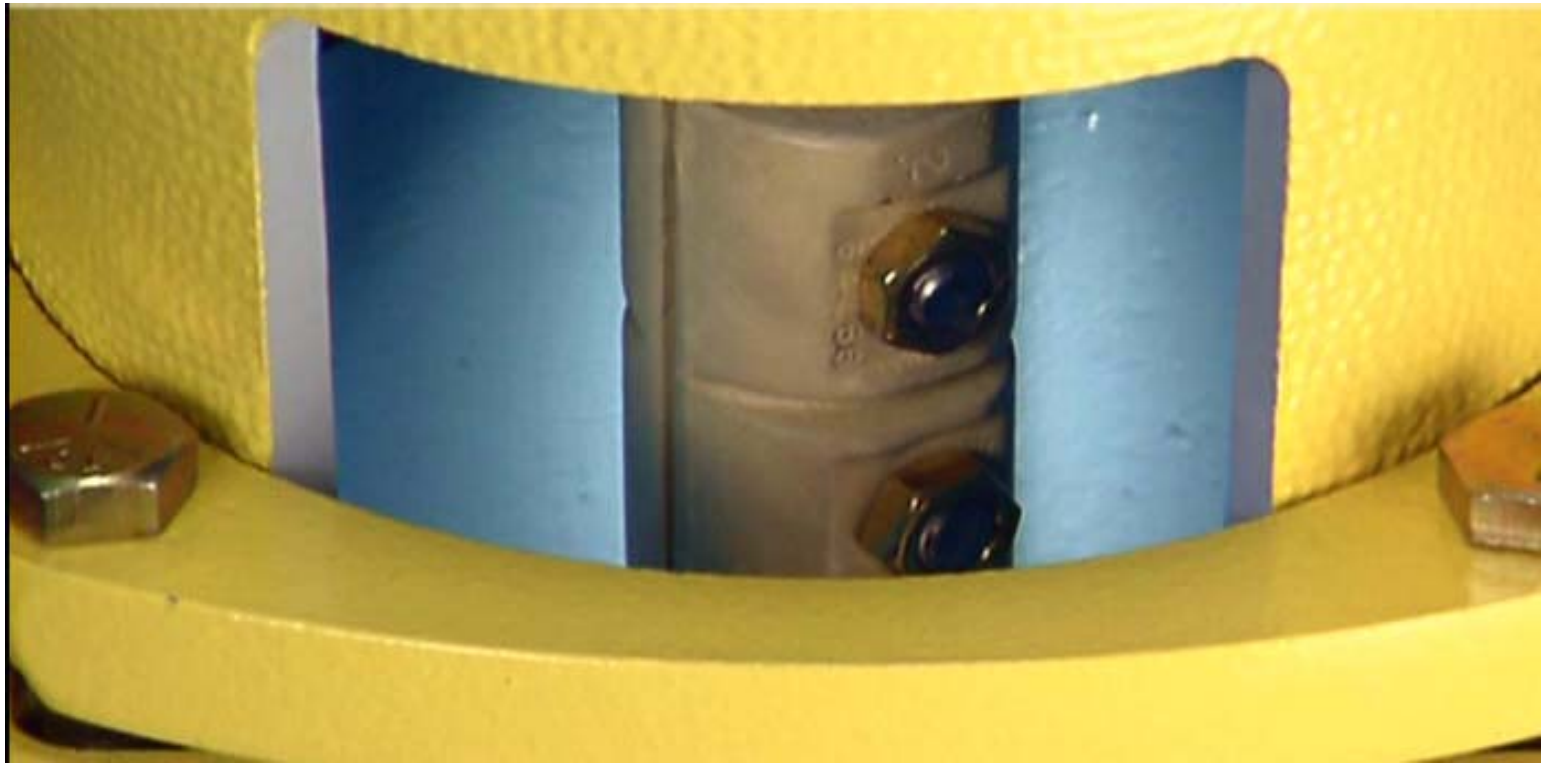

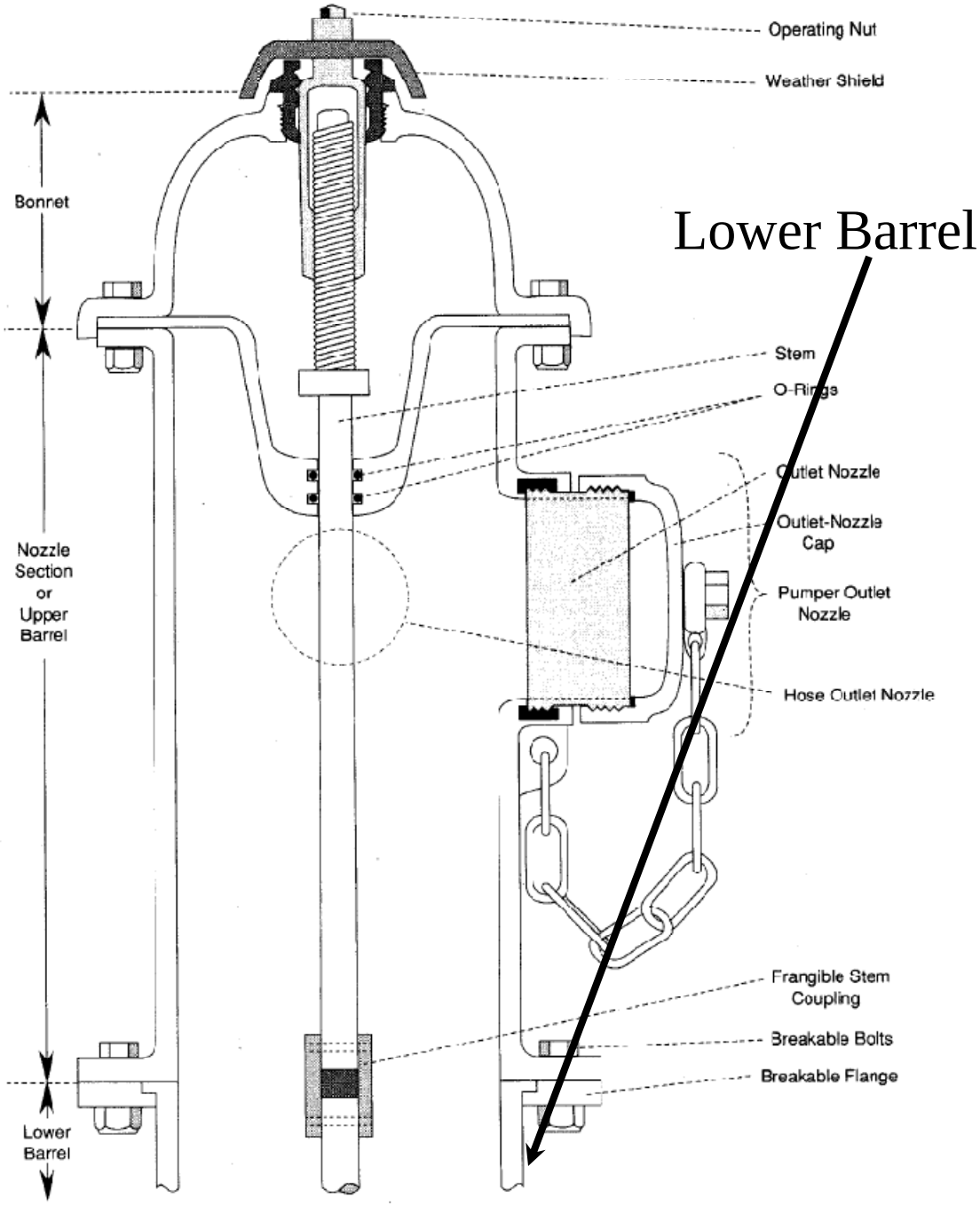
Operating Nut
Weather Shield
Bonnet
Lower Barrel
Stem
O-Rings
Outlet Nozzle
Outlet-Nozzle Cap
Pumper Outlet Nozzle
Hose Outlet Nozzle
Nozzle Section or Upper Barrel
Frangible Stem Coupling
Breakable Bolts
Breakable Flange
Lower Barrel

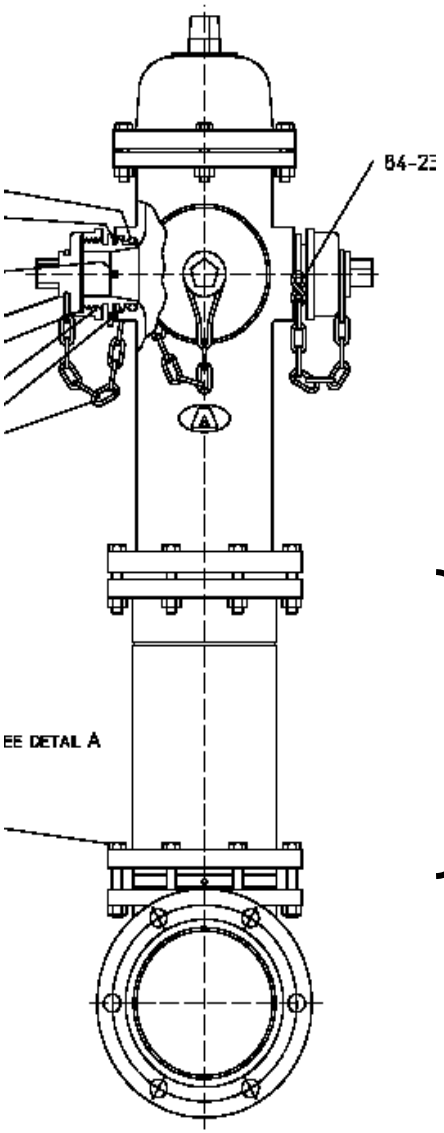

Lower Barrel

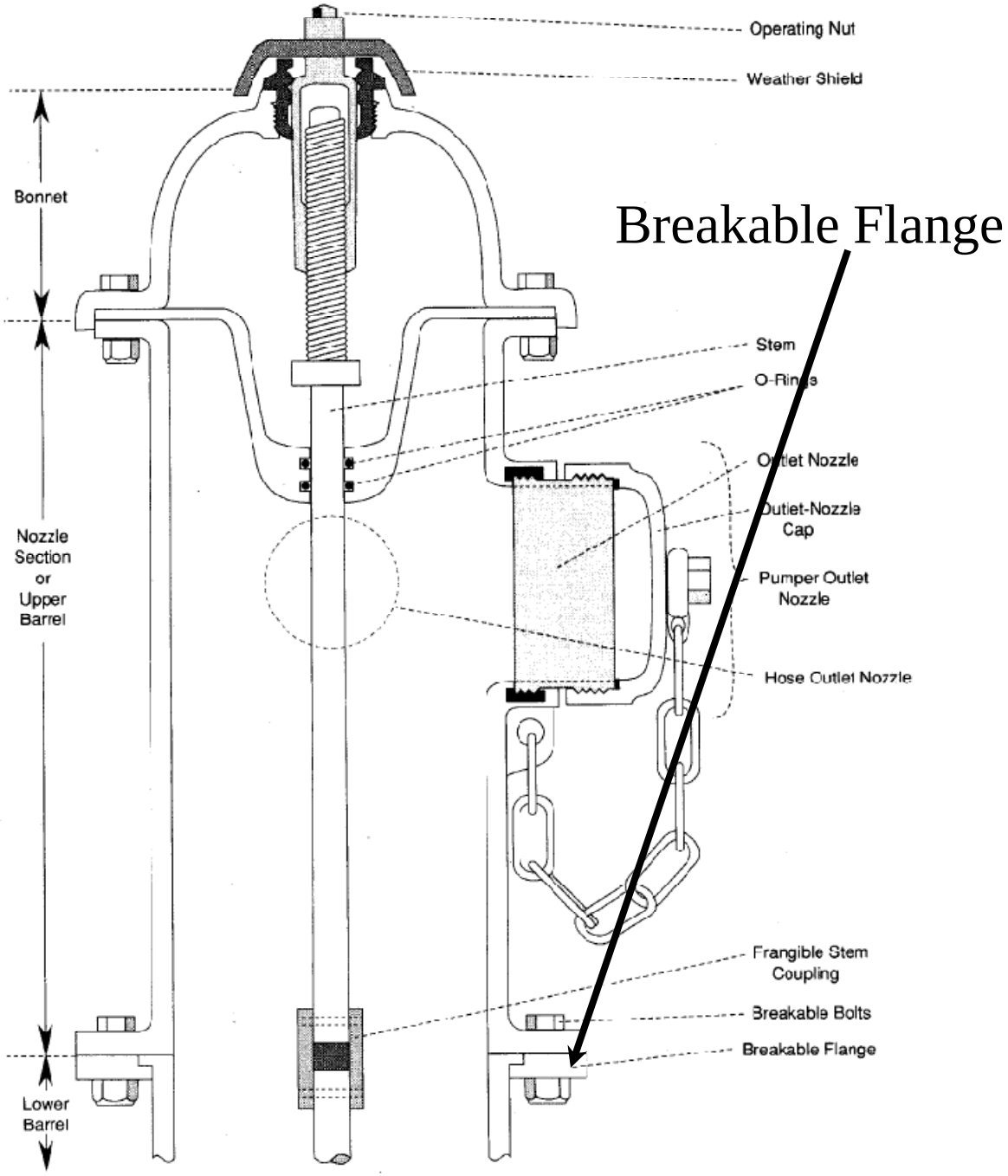
Operating Nut
Weather Shield
Bonnet
Breakable Flange
Stem
O-Rings
Outlet Nozzle
Outlet-Nozzle Cap
Pumper Outlet Nozzle
Nozzle Section or Upper Barrel
Hose Outlet Nozzle
Frangible Stem Coupling
Breakable Bolts
Breakable Flange
Lower Barrel

Hydrant before 3rd impact

Hydrant after 3rd impact

Broken parts

Nomenclature:

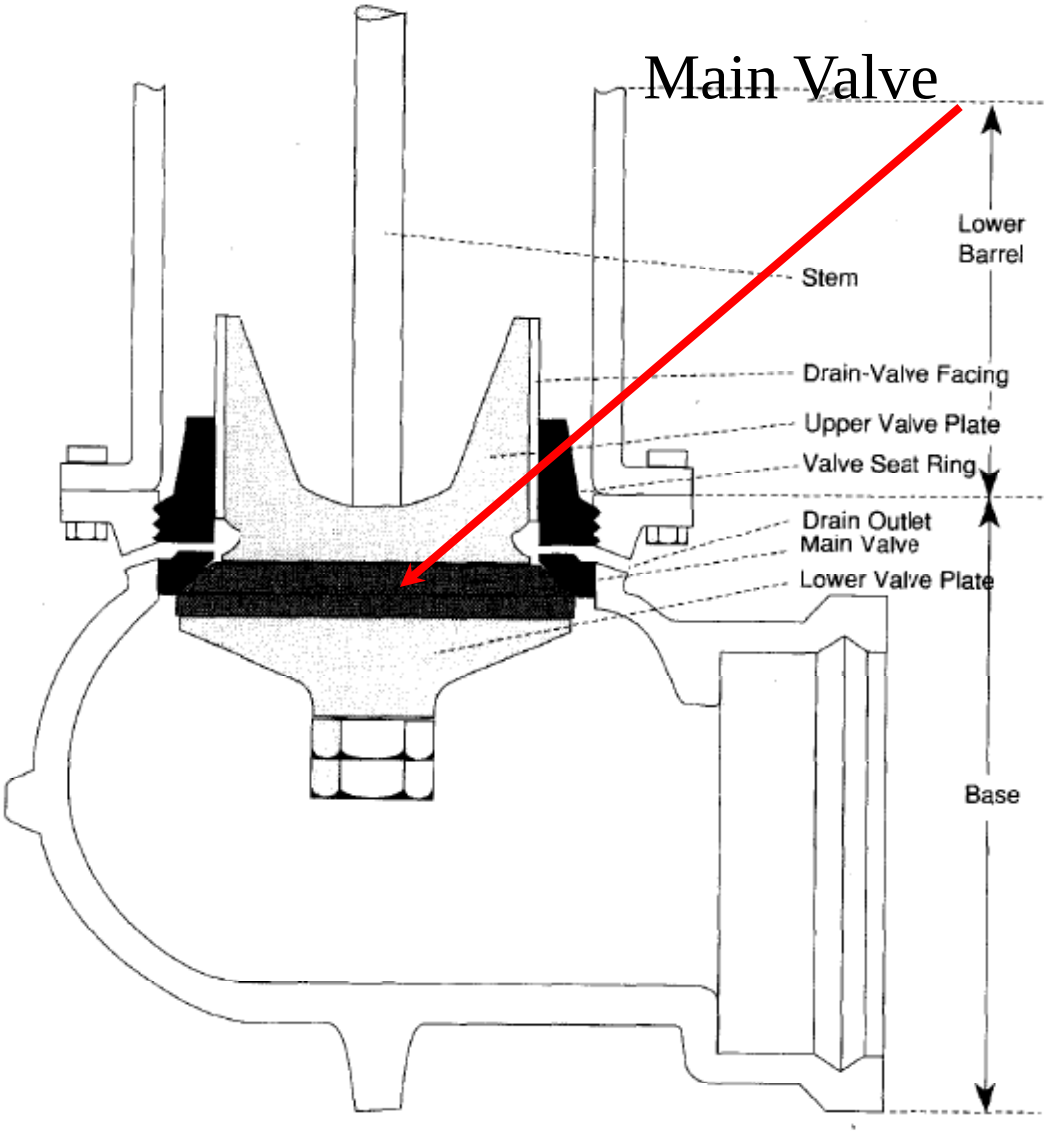

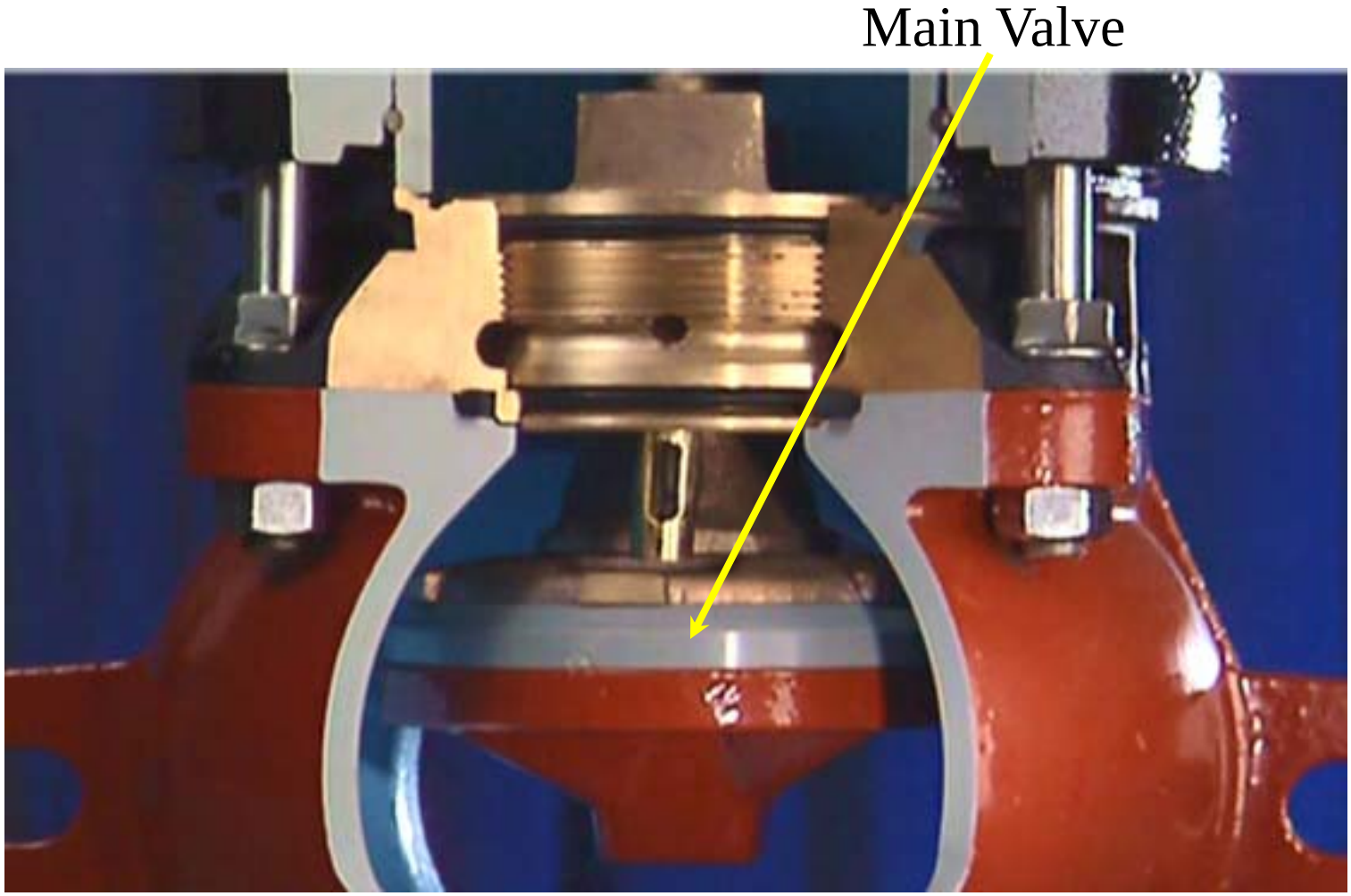
Main Valve

Nomenclature:

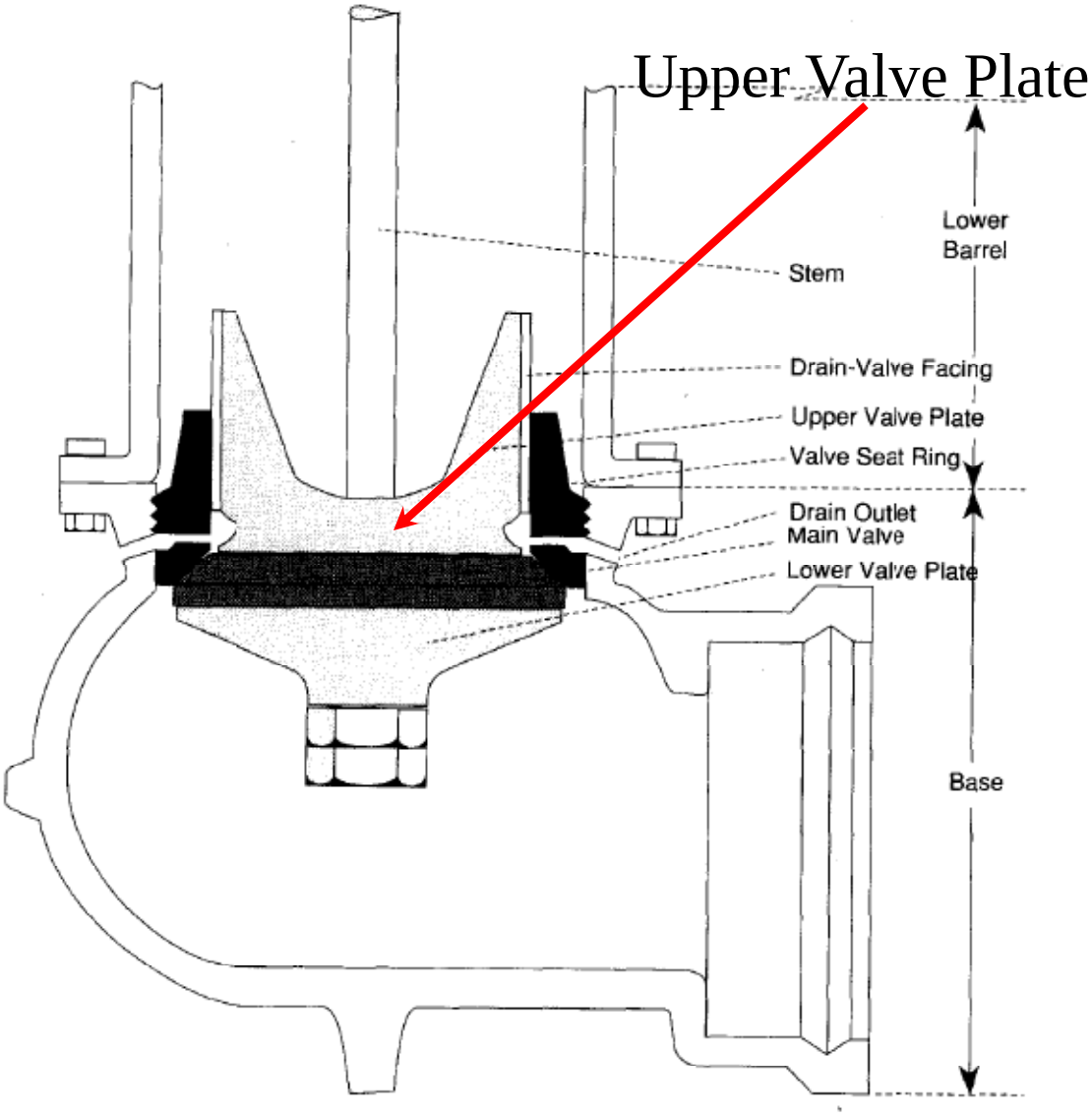

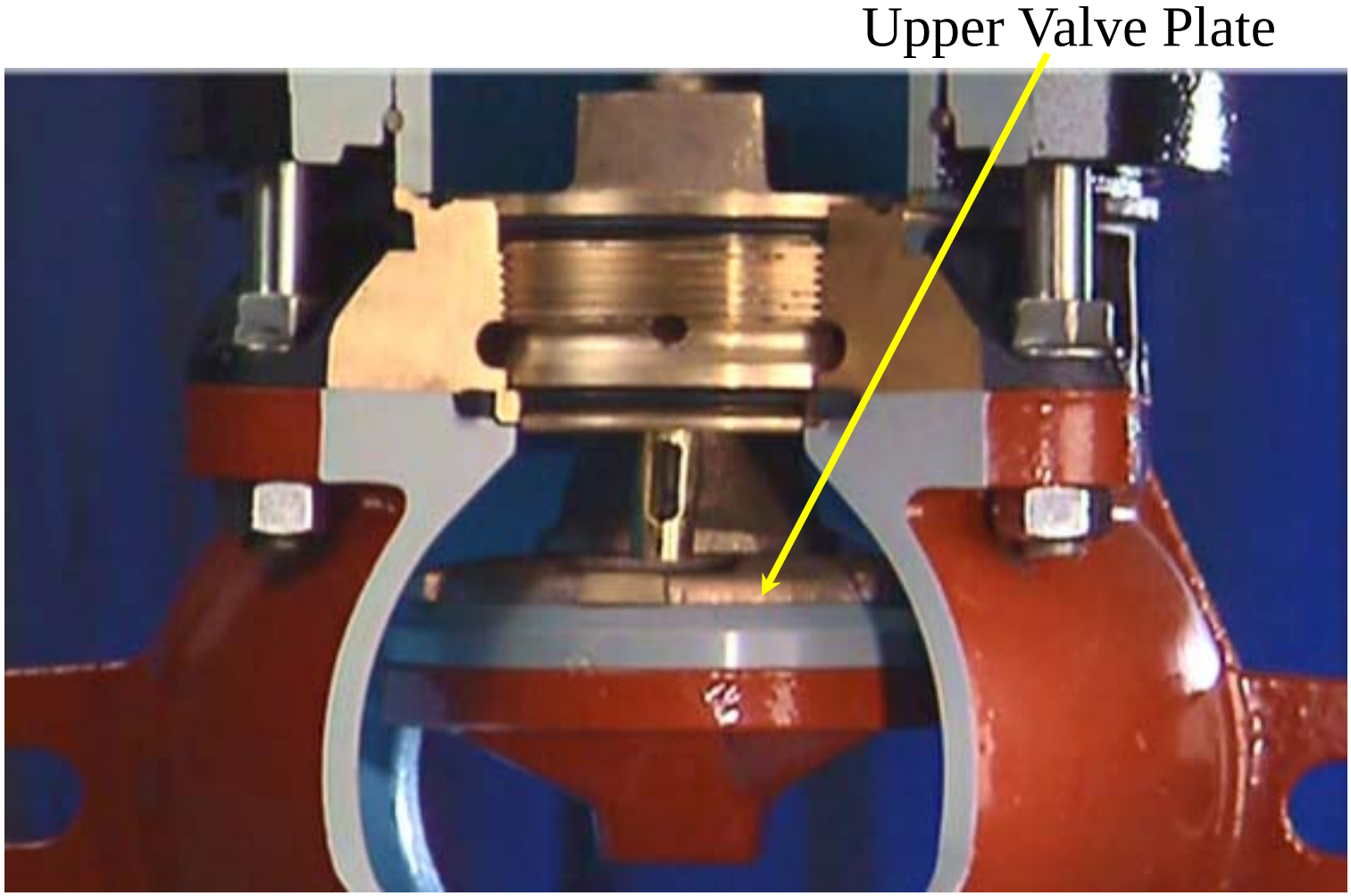
Upper Valve Plate

Nomenclature:

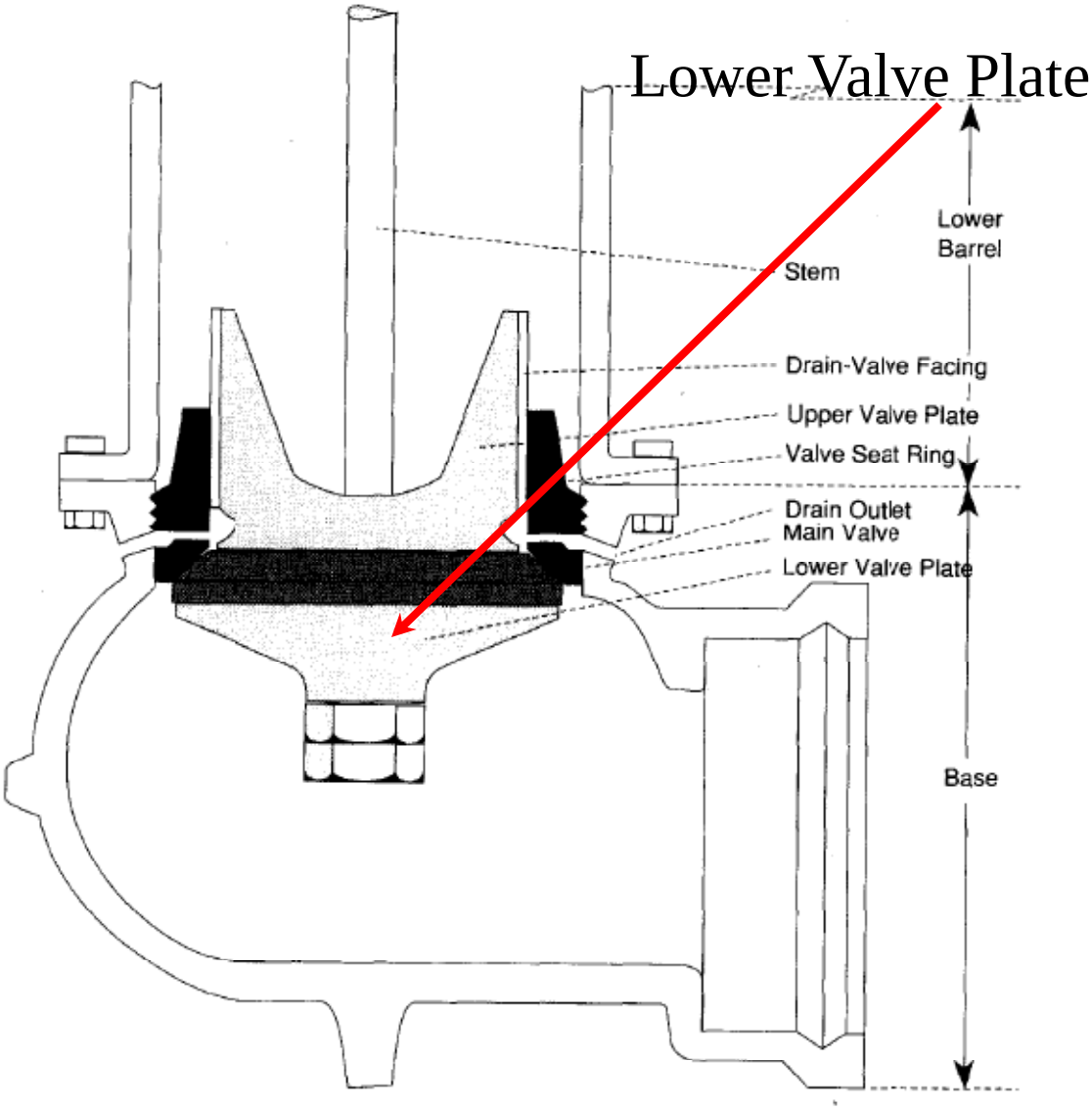

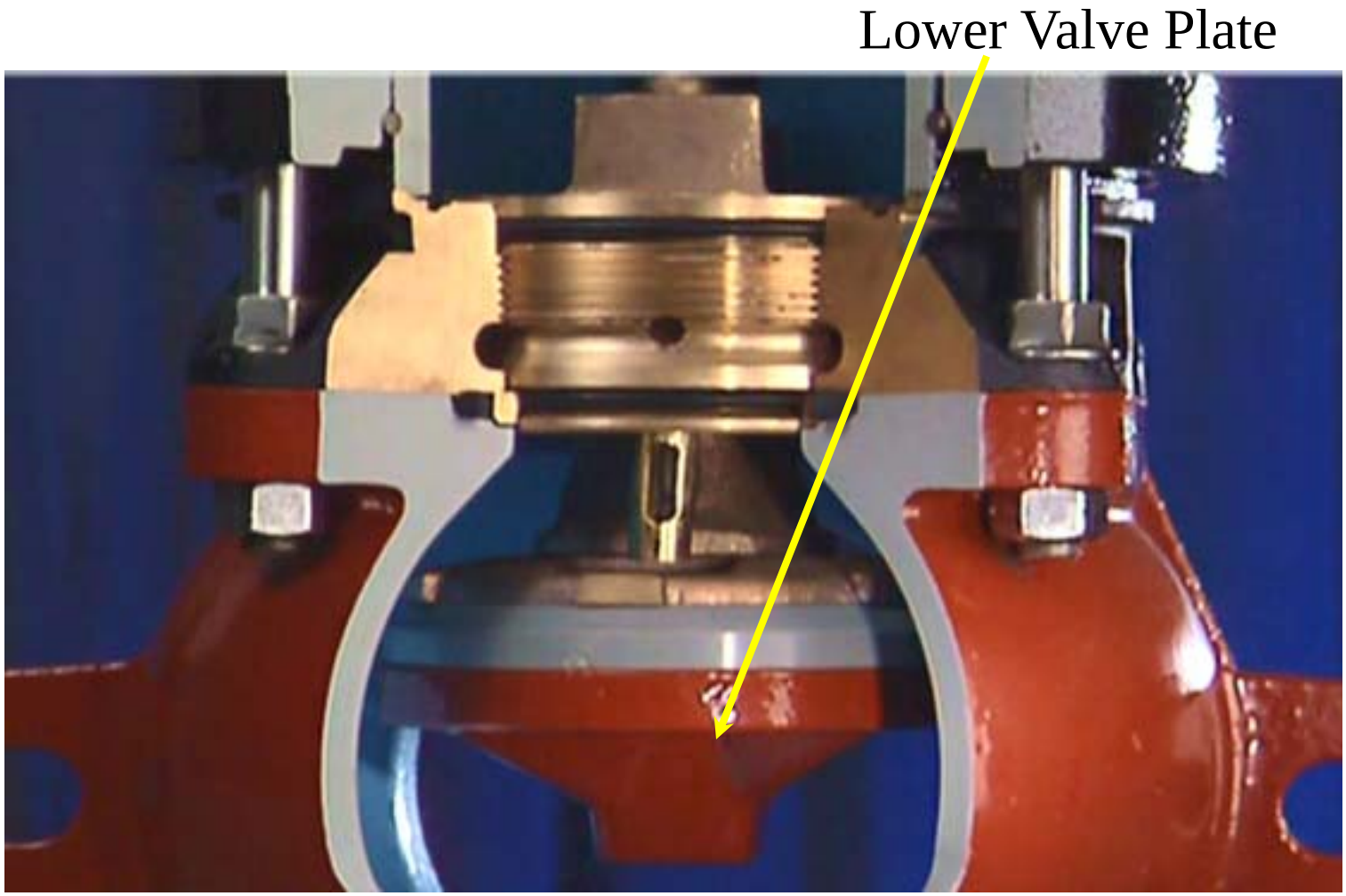
Lower Valve Plate

Nomenclature:

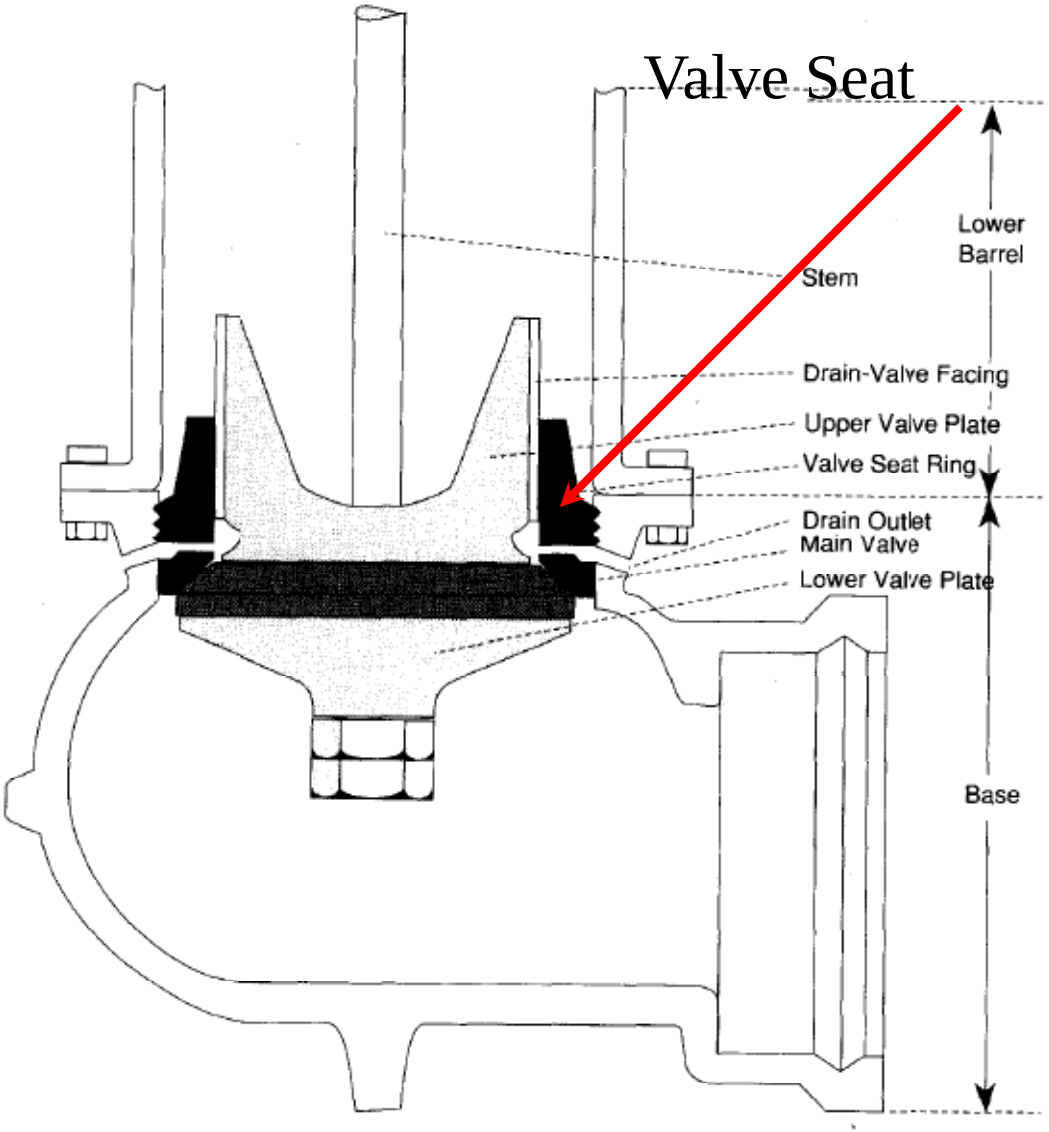

Valve Seat

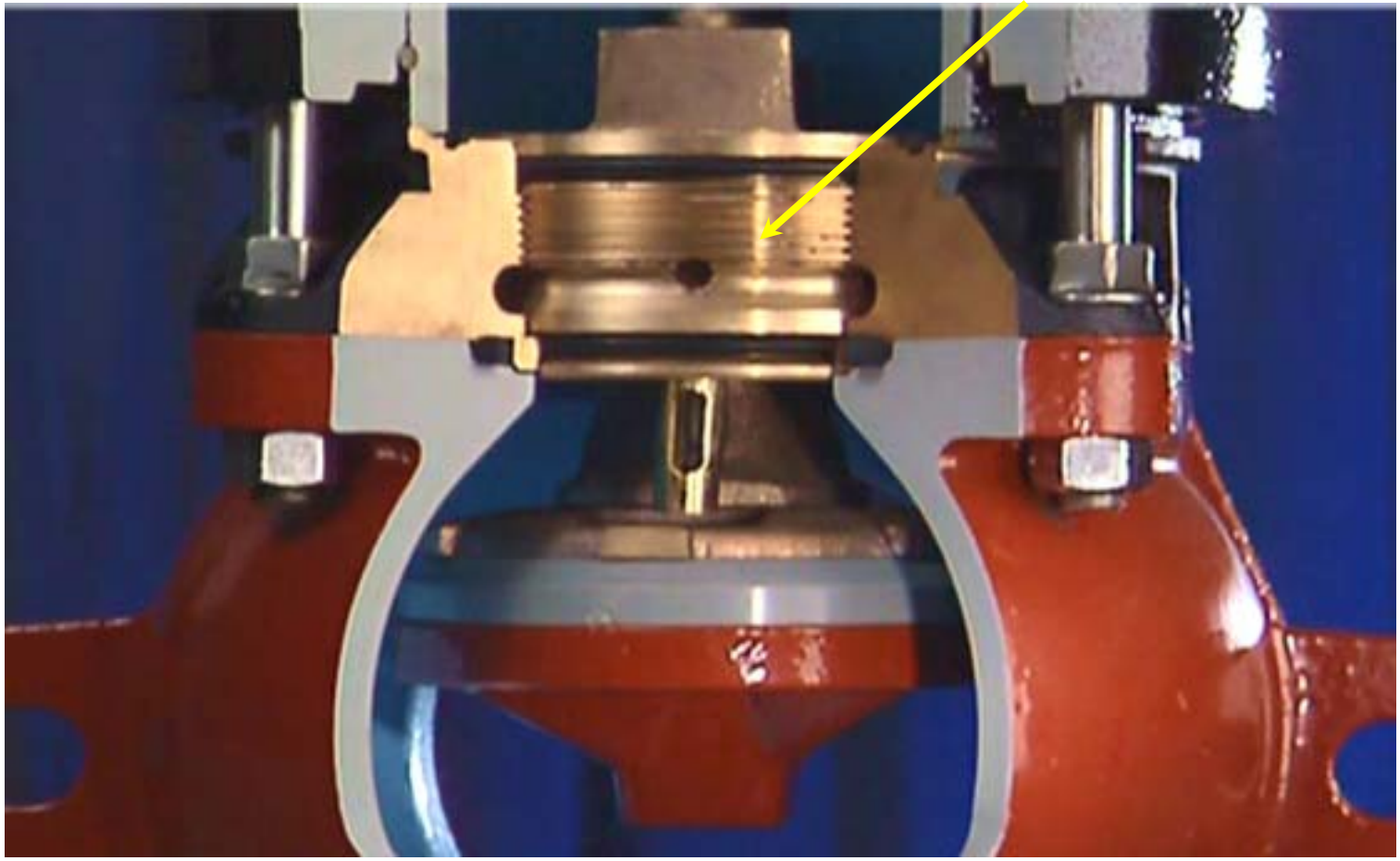

Nomenclature:

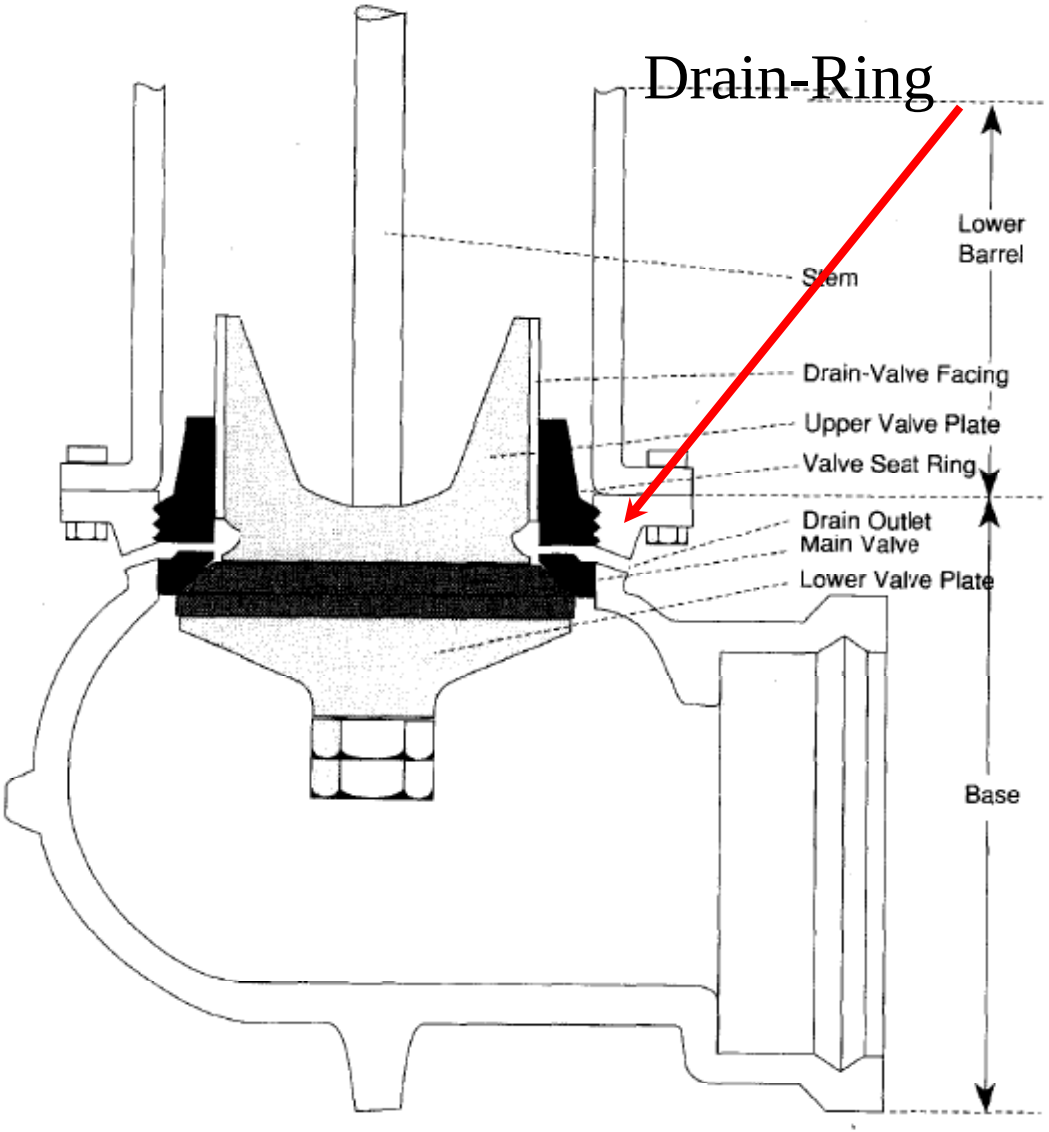

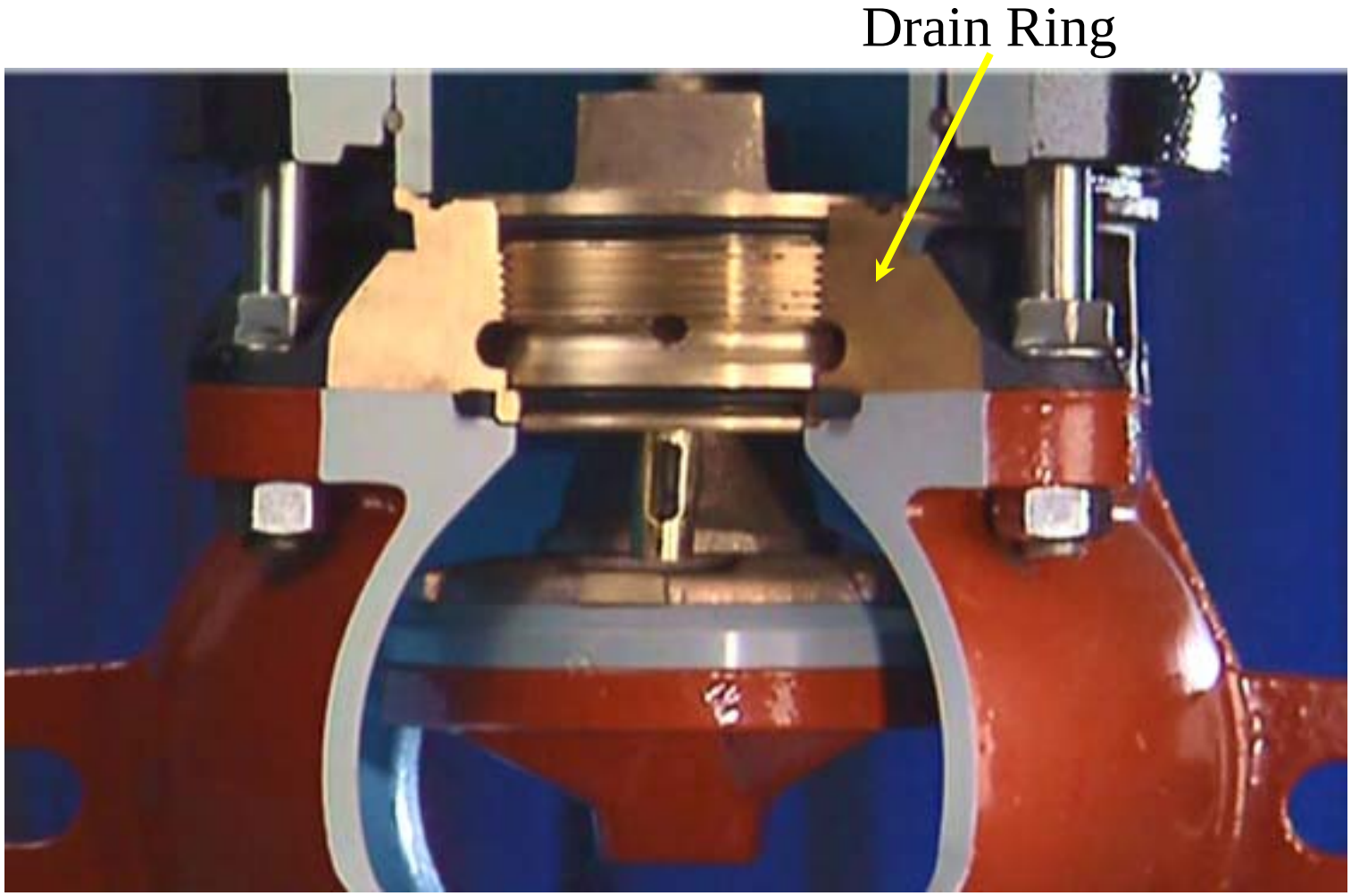
Drain Ring

Nomenclature:

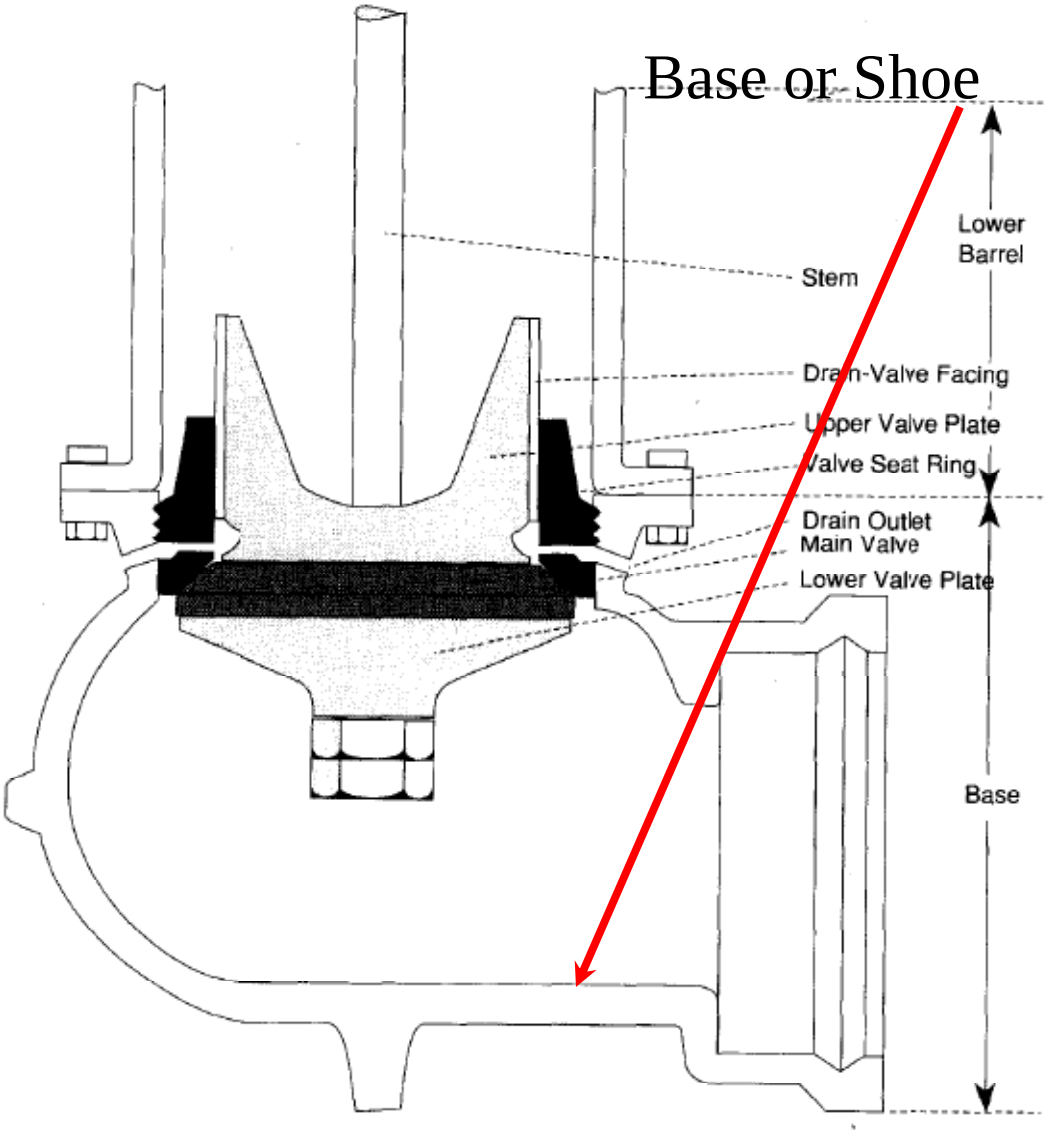

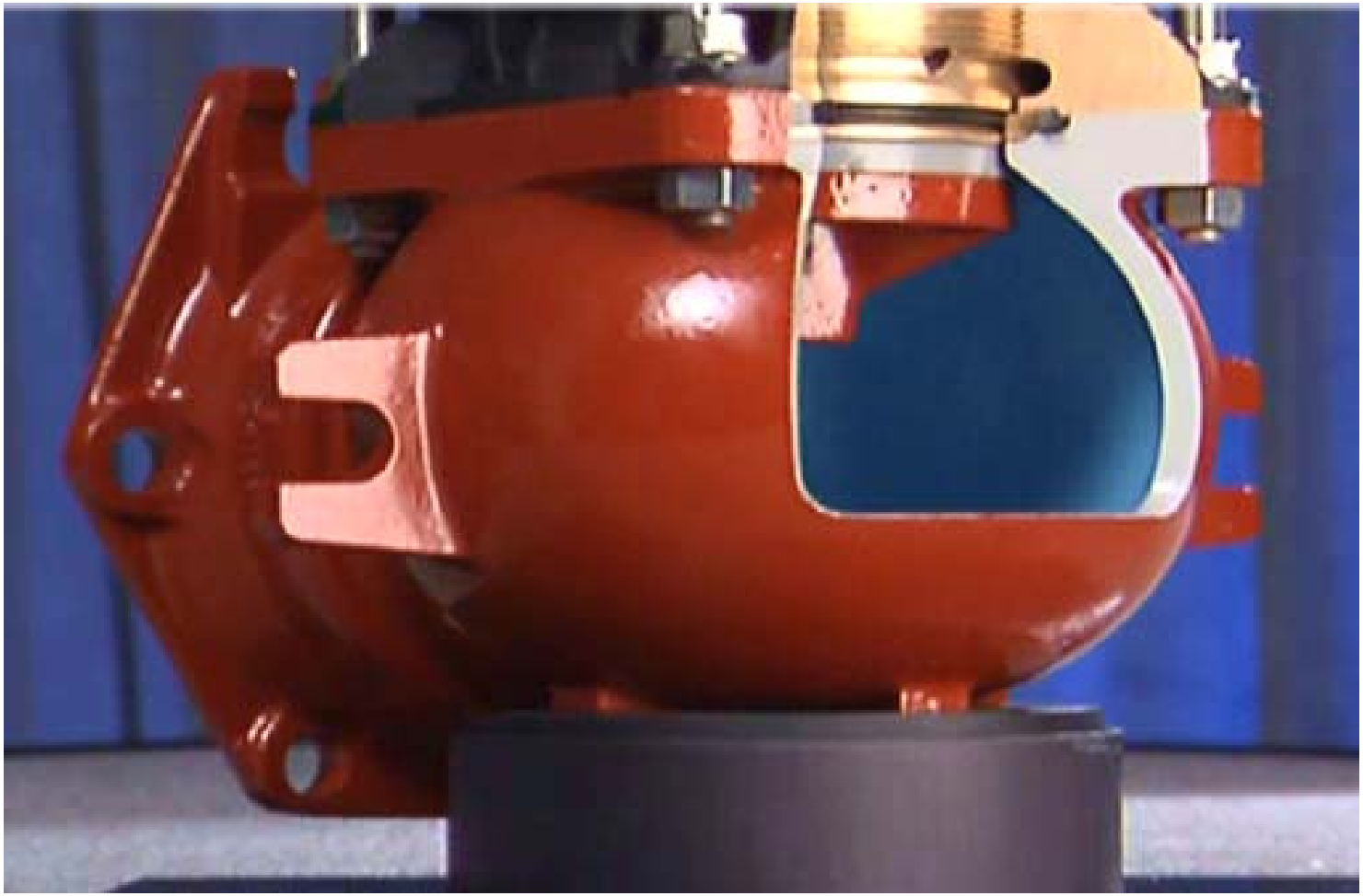

Nomenclature:

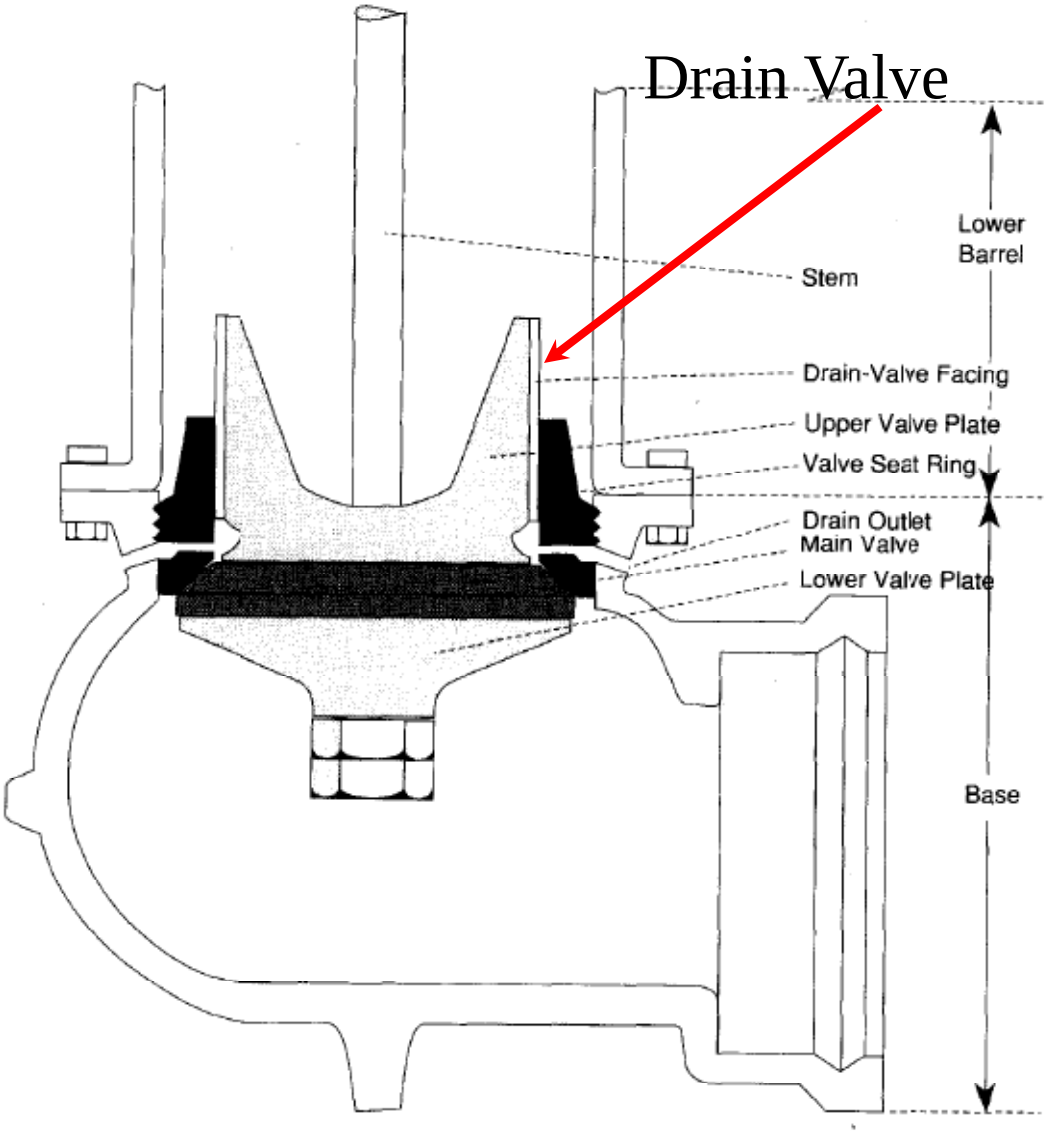

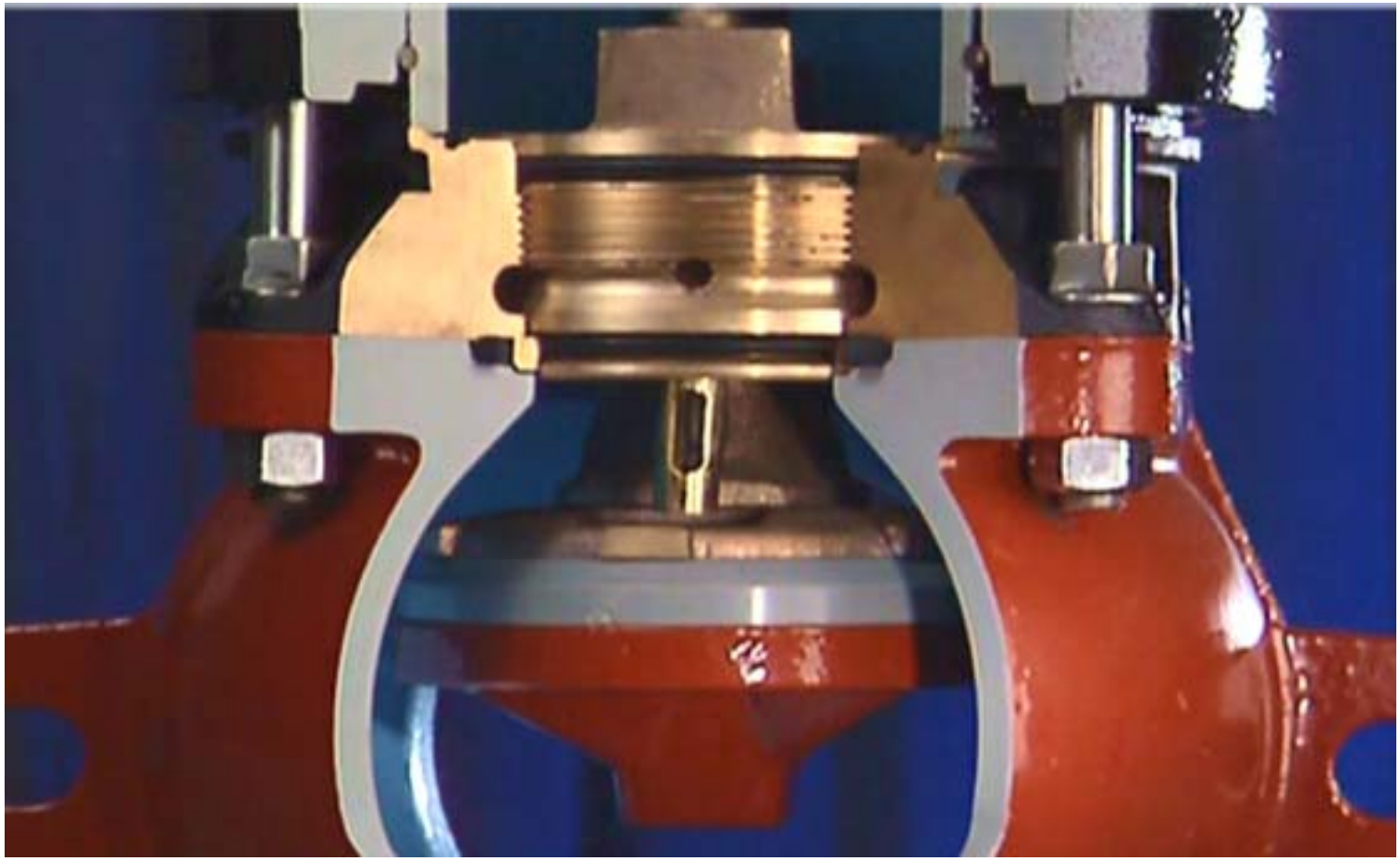

Nomenclature:

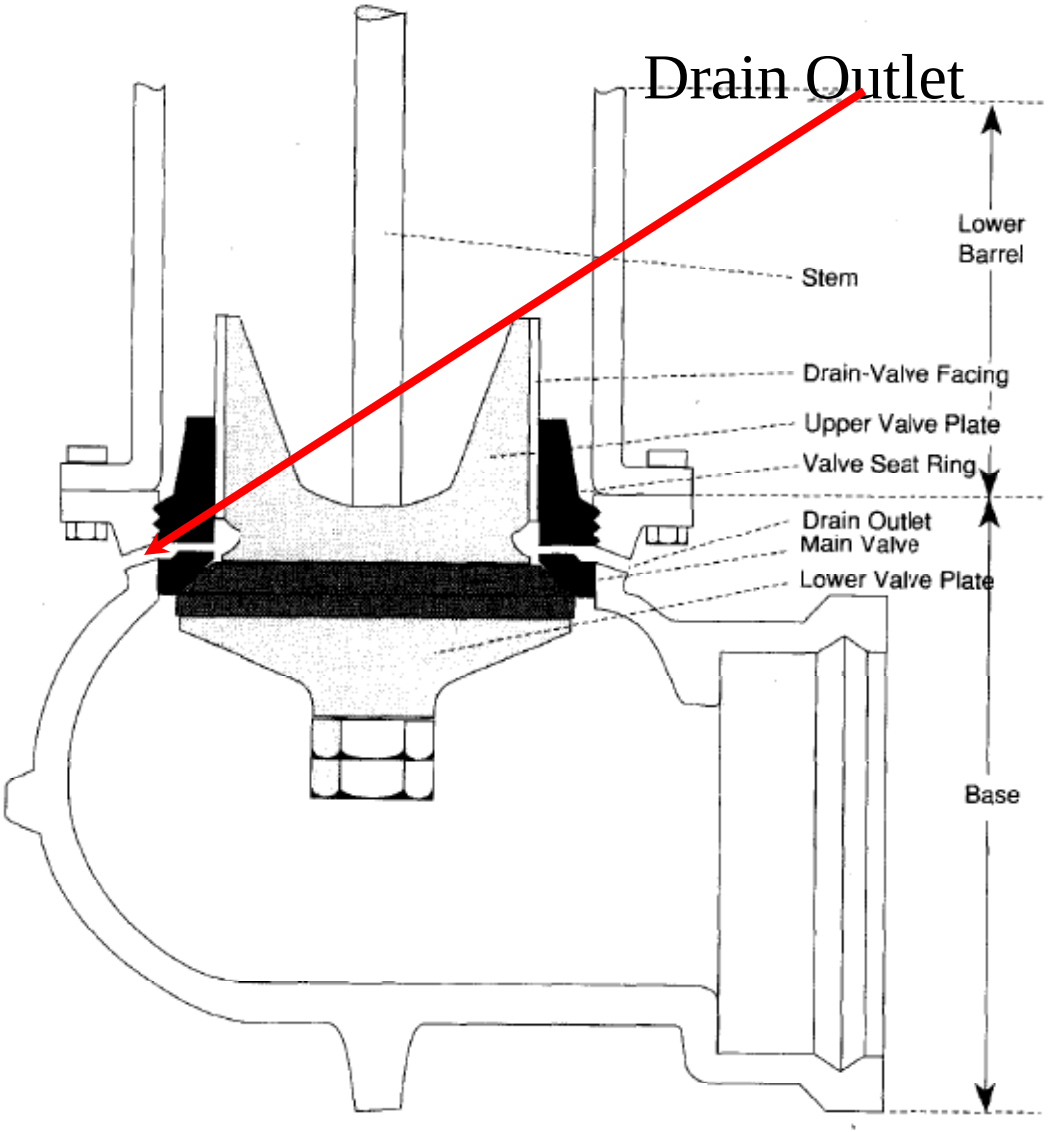

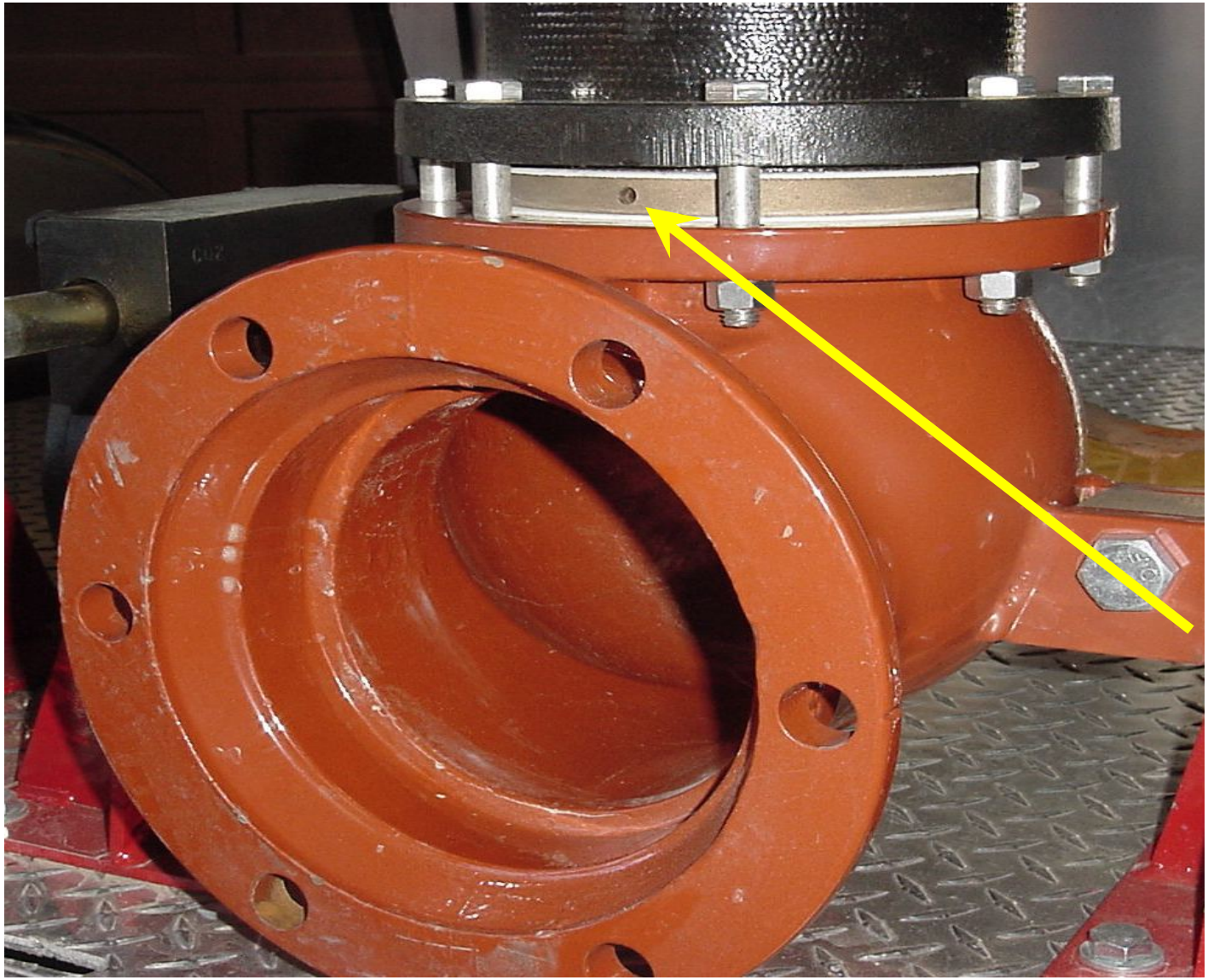

Base Connection & Nozzle Options

- Bases available to fit all pipe connection styles

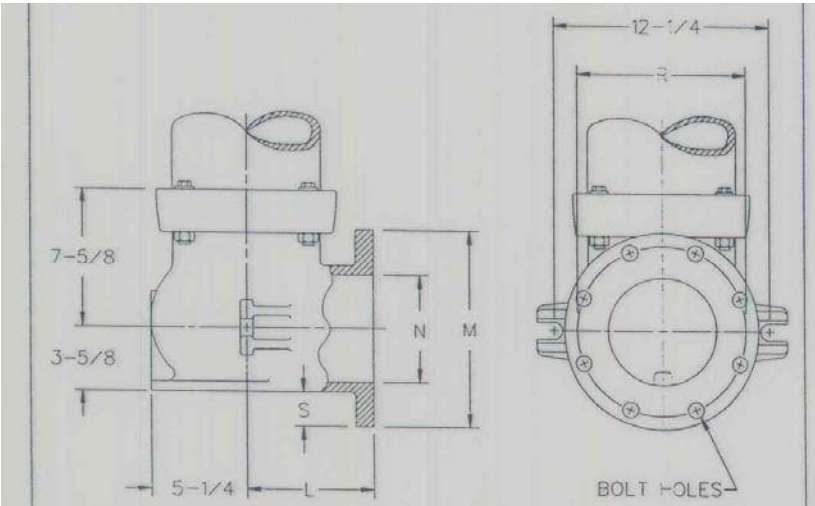

CONNECTING PIPE	L	M	N	R	S	HOLES	
						NO.	SIZE
4 IN.	8-5/8	9	4-5/8	7-1/2	1	8	3/4
6 IN.	8-1/4	11	6	9-1/2	2	8	7/8

NOTE: BOLT PATTERN AND FLANGE THICKNESS OF FLANGED BOTTOMS ARE PER ASME/ANSI B16.1 CLASS 125 AND ANSI/AWWA C110/A21.10

FLANGED CONNECTION

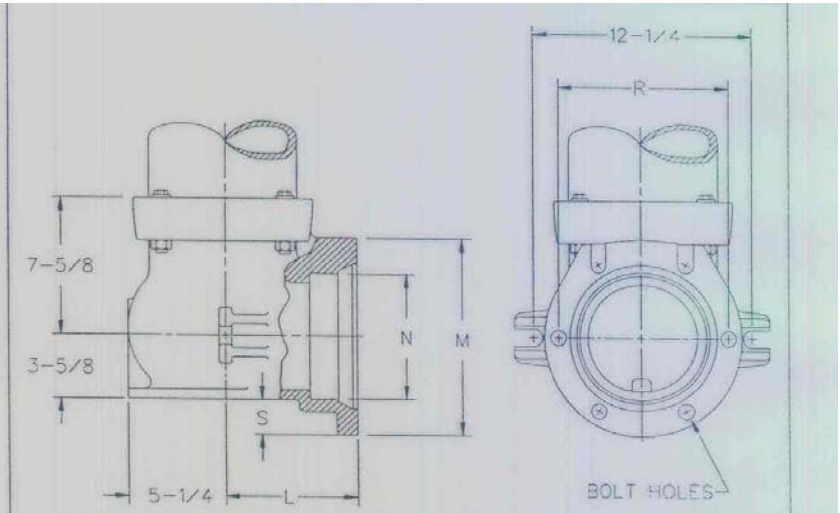

CONNECTING PIPE	L	M	N	R	S	HOLES	
						NO.	SIZE
4 IN.	8-7/8	9-1/16	4-15/16	7-1/2	1	4	7/8
6 IN.	7-3/4	11-1/16	7	9-1/2	2	6	7/8
8 IN.	9-7/8	13-5/16	9-3/16	11-3/4	3	8	7/8

MECHANICAL JOINT CONNECTION

Base Connection & Nozzle Options

- Bases available to fit all pipe connection styles

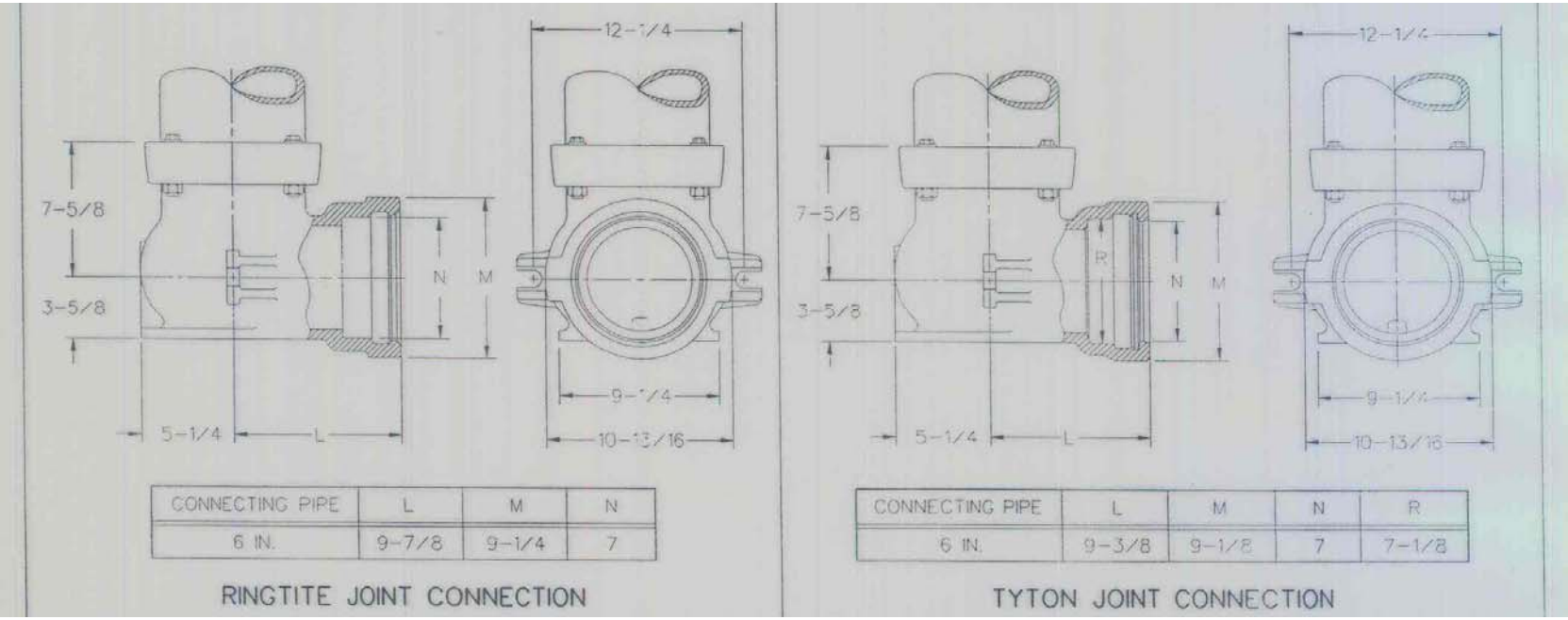

Hydrant Operation

- All nozzle caps on tight
- Don’t stand in front of caps while operating
- Always use a hydrant wrench
- **OPEN HYDRANT SLOWLY!!**
- Open hydrant completely
- **CLOSE HYDRANT SLOWLY!!**

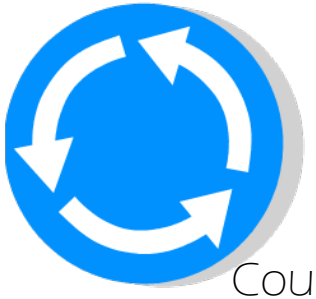

Counter clockwise to open

Hydrant Valve Operation

- Dry-barrel, Center Stem

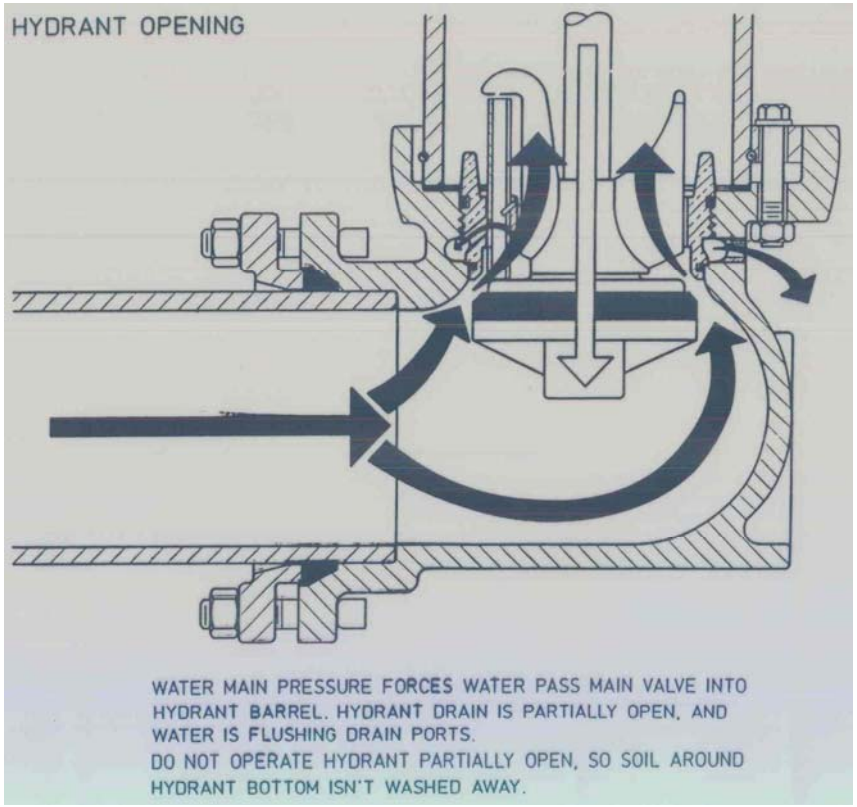

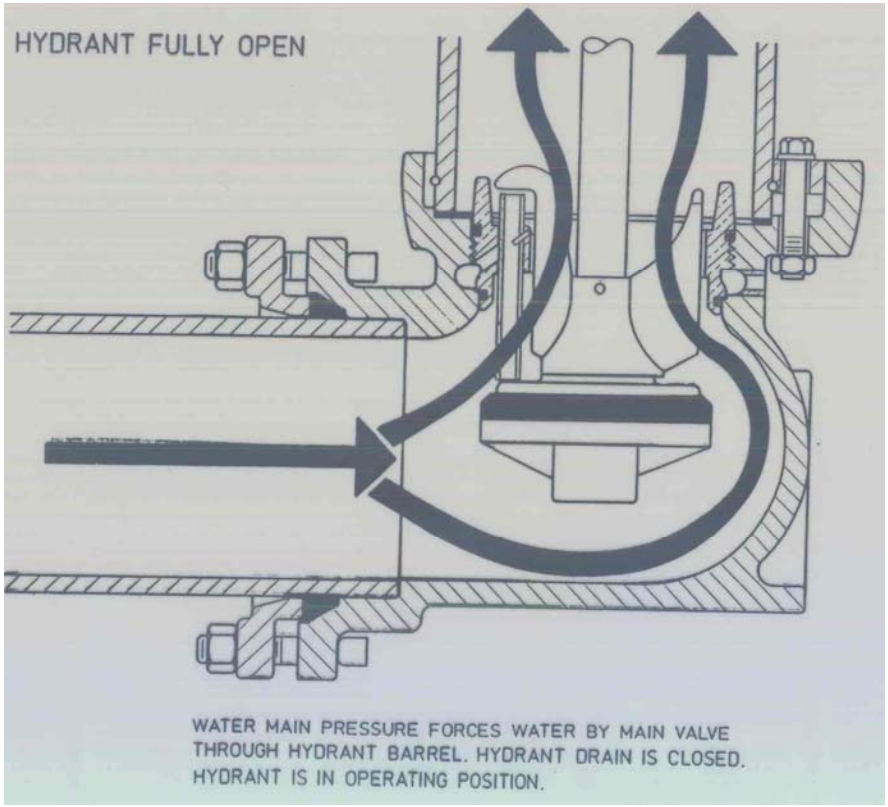

Hydrant Valve Operation

- Dry-barrel, Center Stem

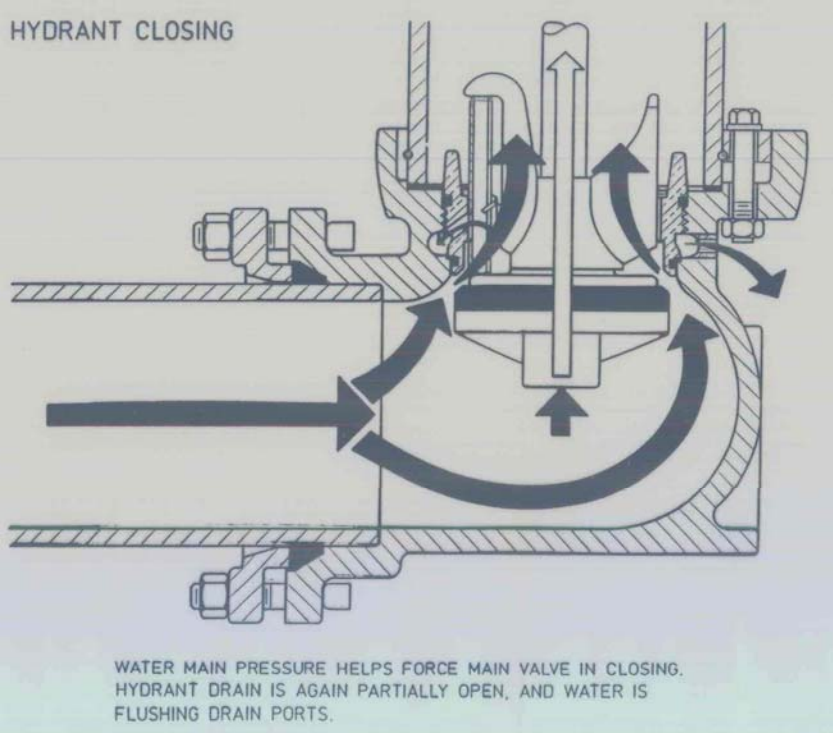

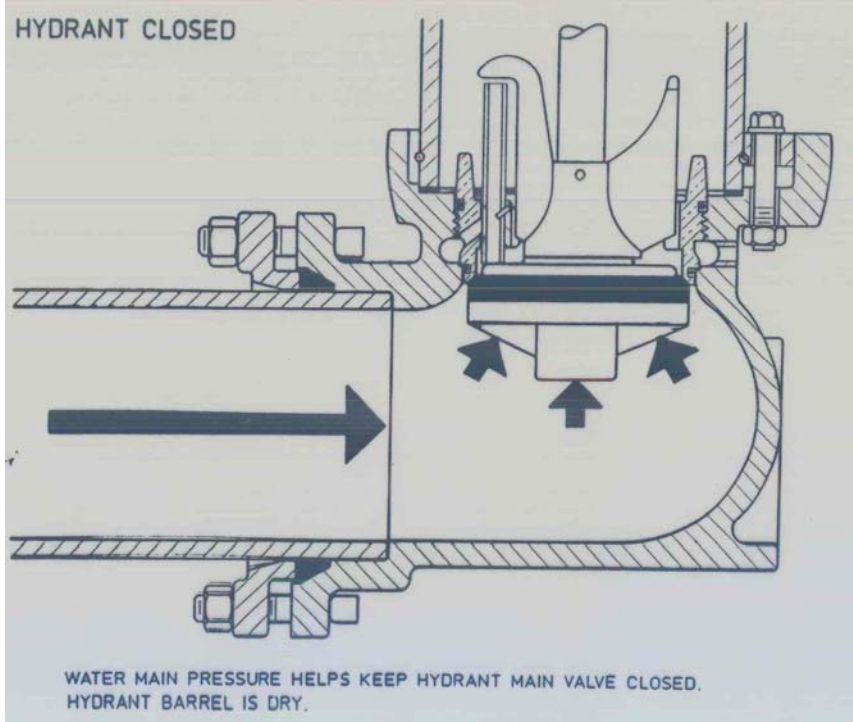

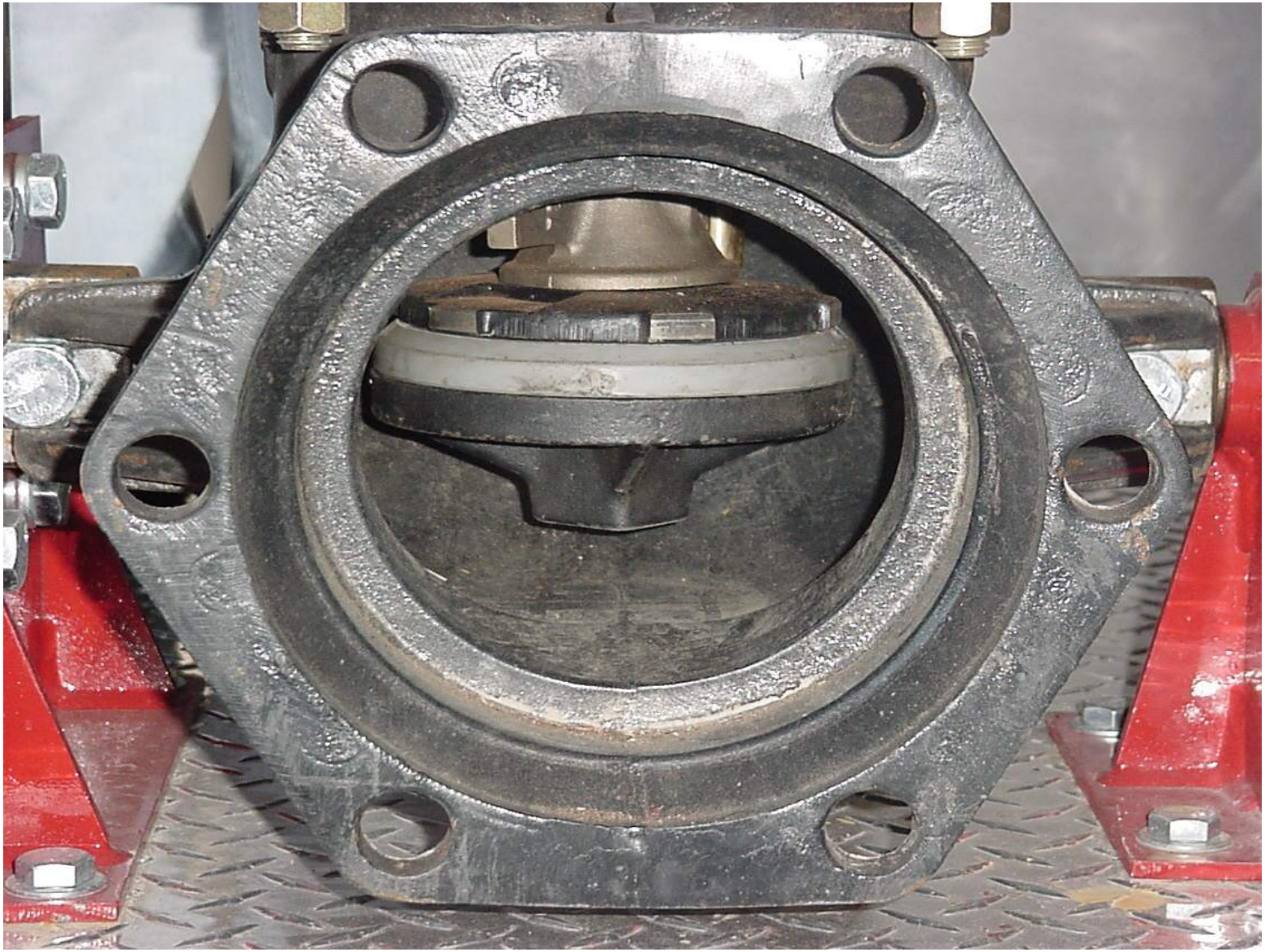

Modern Dry Barrel Hydrants

- AWWA C502
  - Clow
  - Darling
  - Mueller
  - Waterous
  - M & H

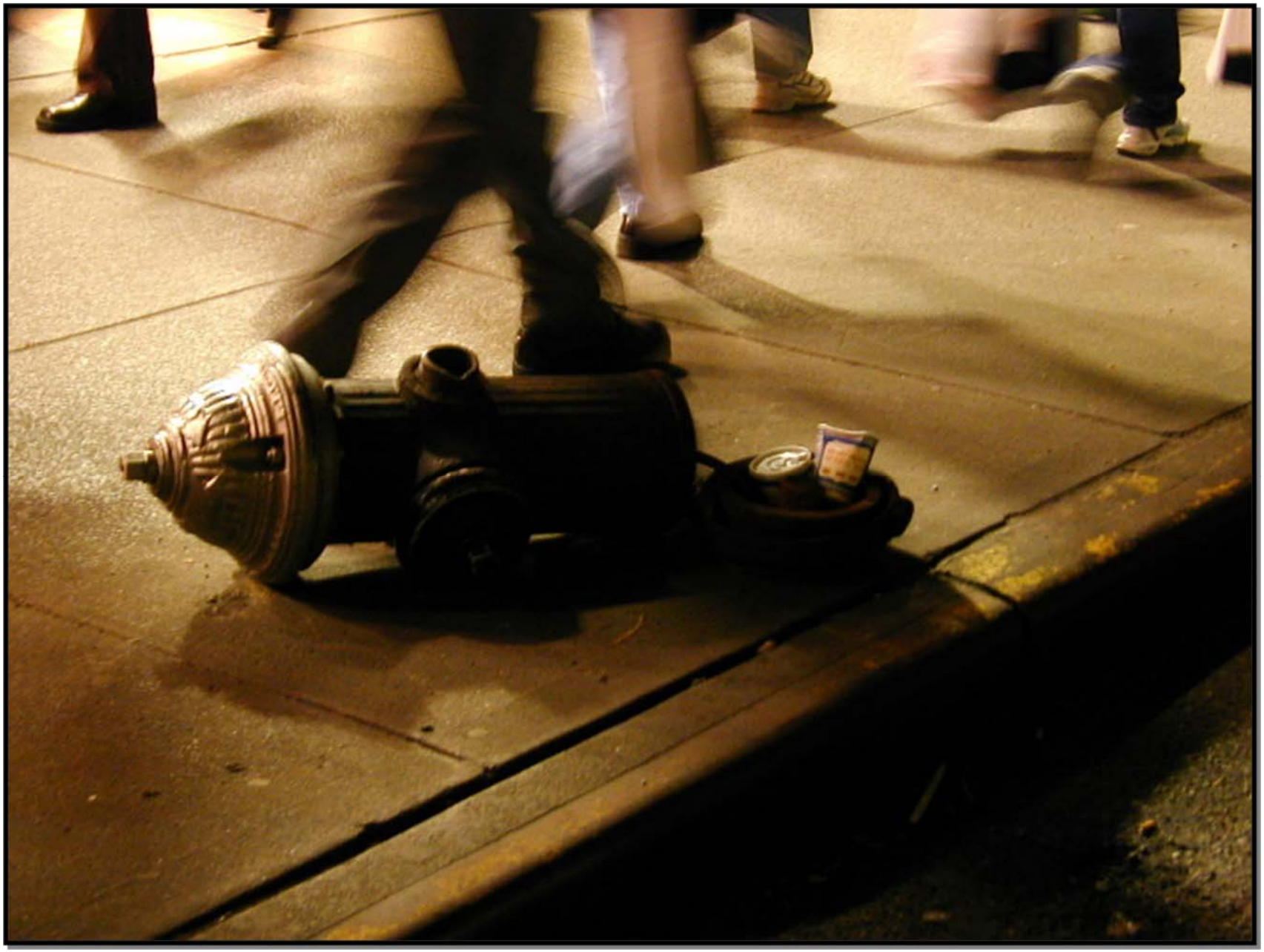

Wet Barrel Fire Hydrants

- AWWA C503
- Nomenclature
- Geographic Areas Used
- Compression: Closes with Water Pressure

Wet Barrel Fire Hydrants

Wet Barrel Fire Hydrants

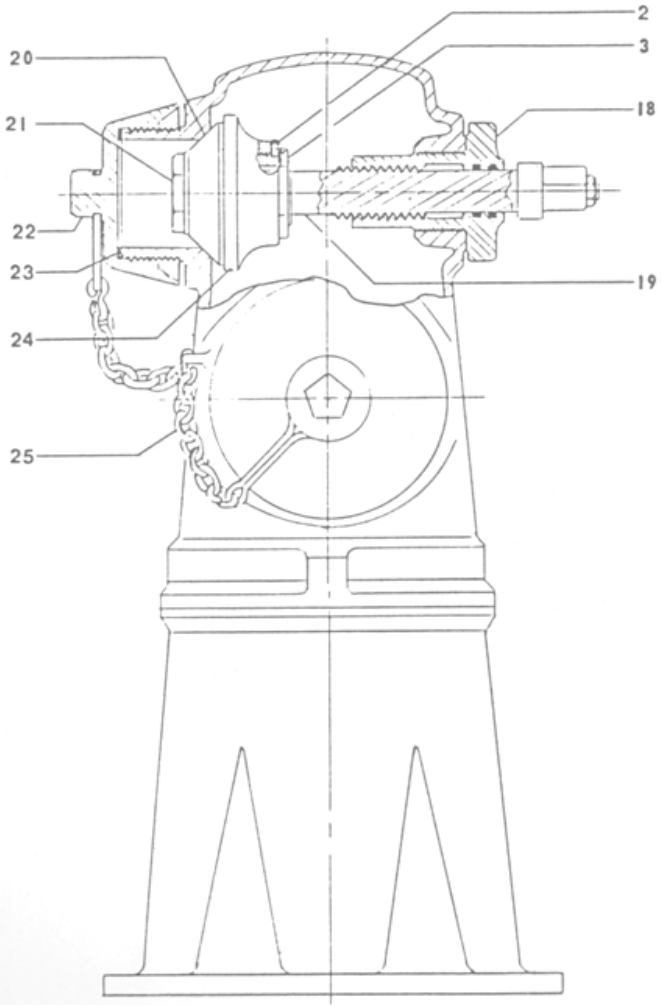

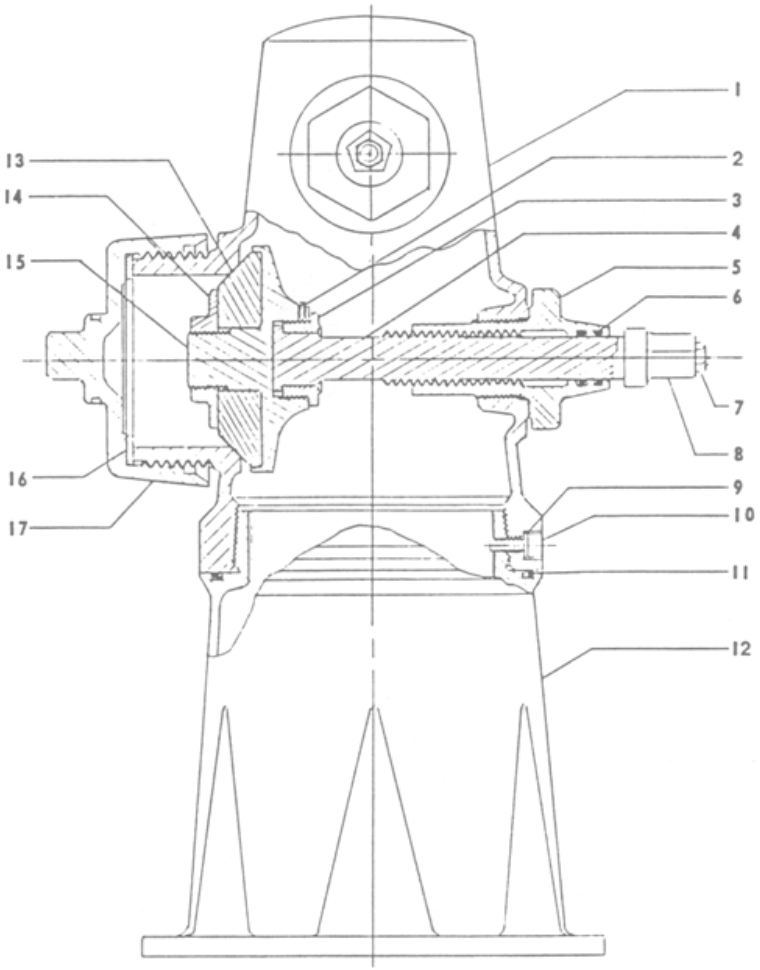

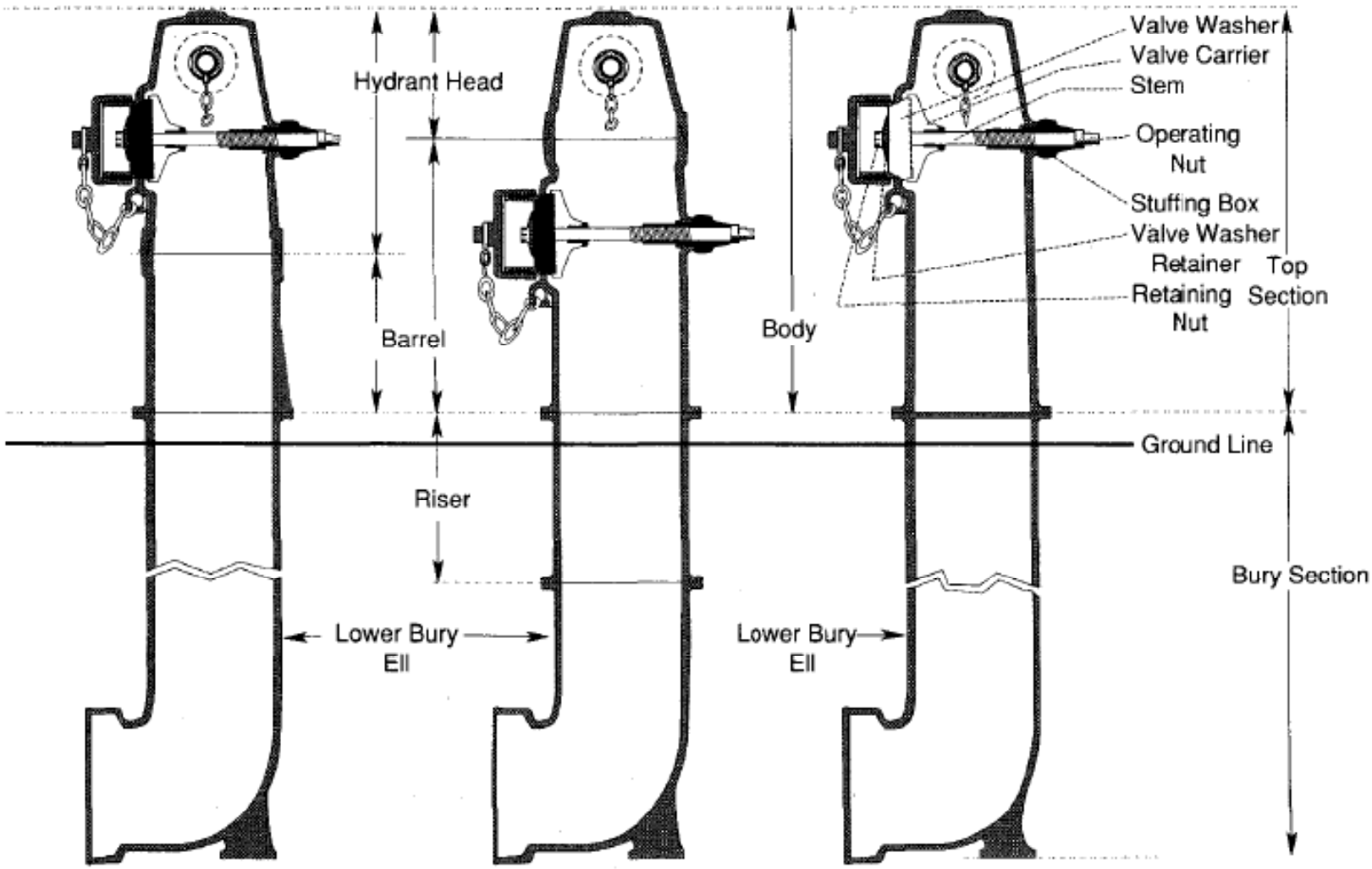
Hydrant Head
Barrel
Riser
Lower Bury
Ell
Body
Lower Bury
Ell
Valve Washer
Valve Carrier
Stem
Operating
Nut
Stuffing Box
Valve Washer
Retainer
Retaining
Nut
Top
Section
Ground Line
Bury Section
Two-piece Hydrants
One-piece Hydrant

Hydrant Styles

Wet Barrel Hydrants

- Installed only in areas where there is no danger of freezing

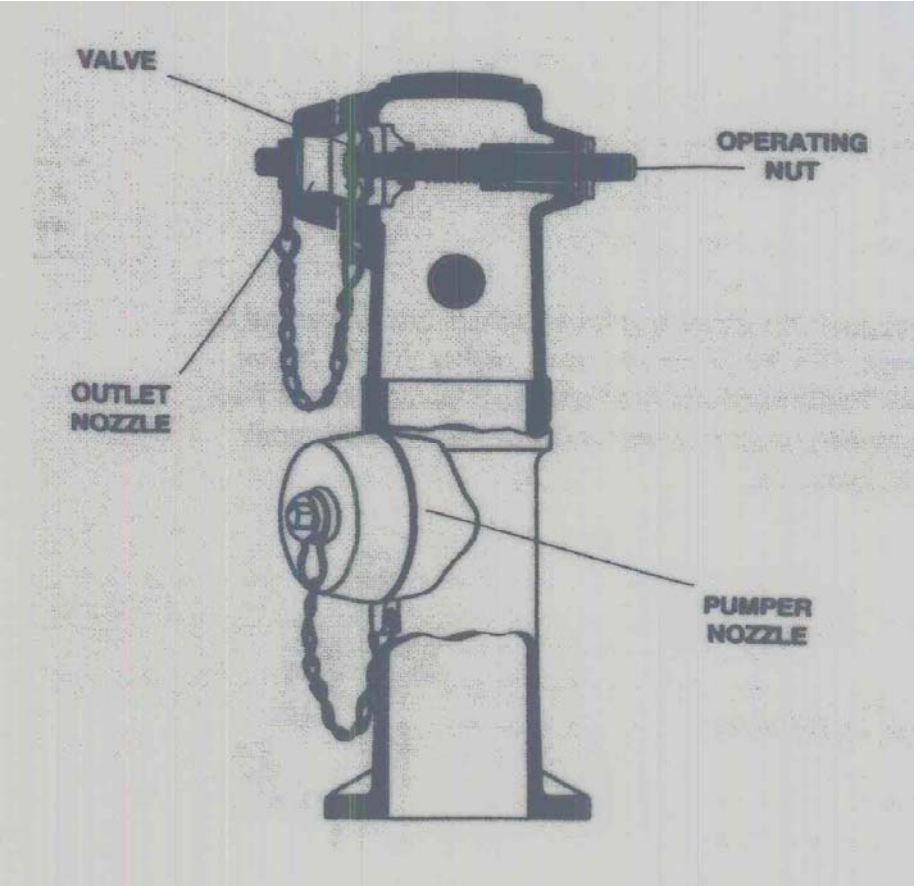

James Jones

Common Hydrant Valve Types

- Compression closing with the pressure
- Compression closing against the pressure
- Toggle or Scissor
- Slide-Gate

Compression:
Closes with Water Pressure

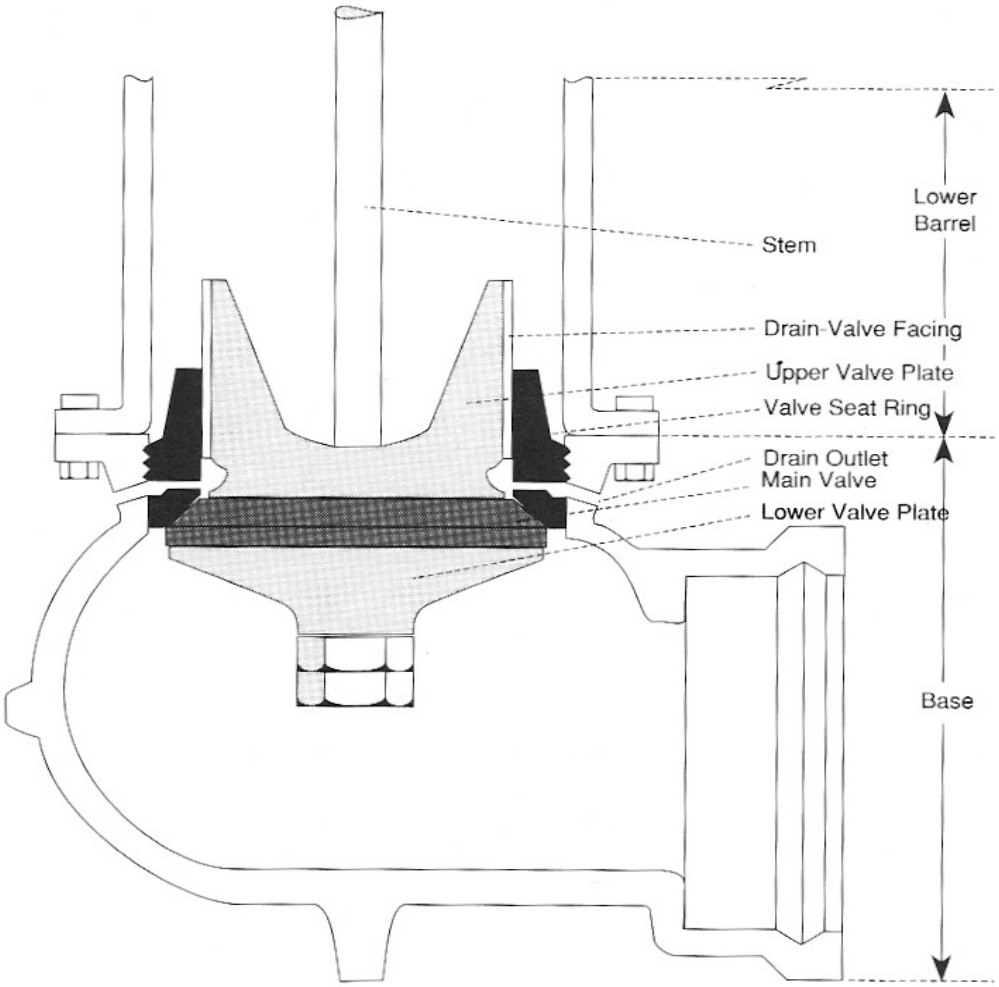

Compression: Closes Against Water Pressure

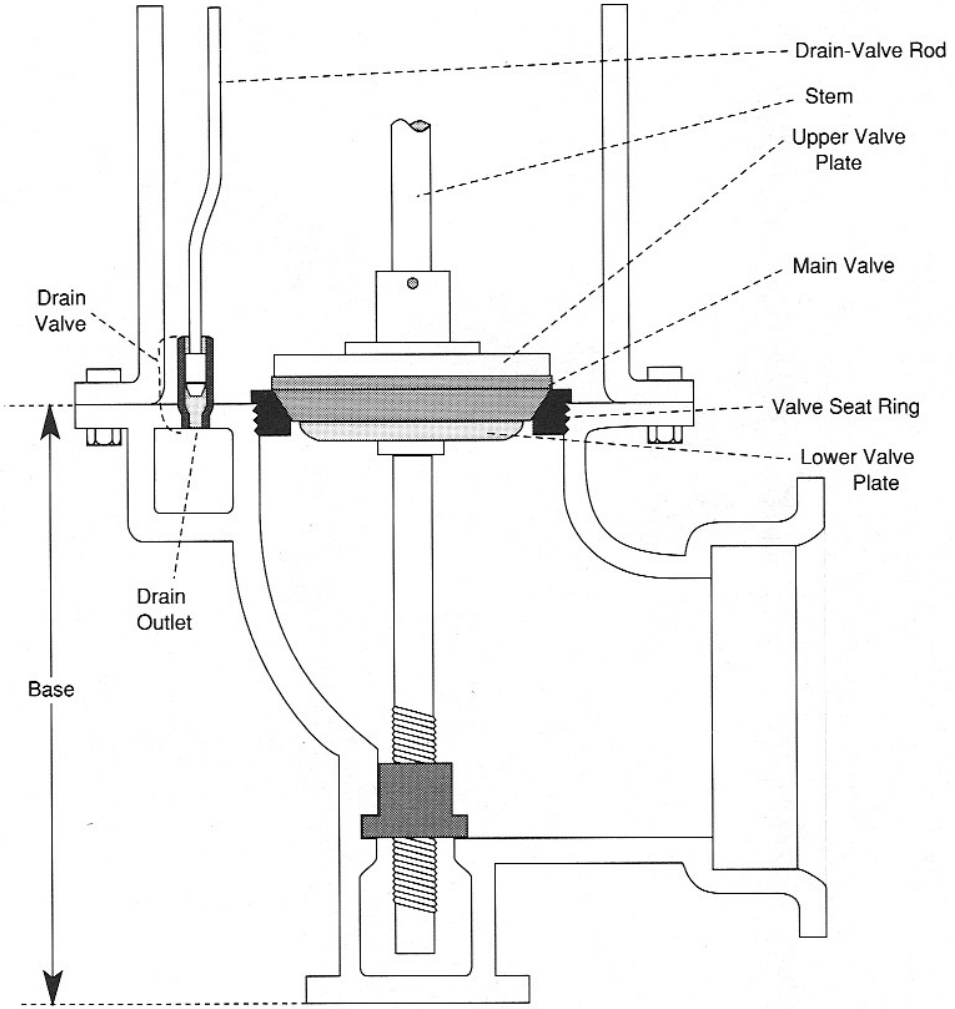

Eddy

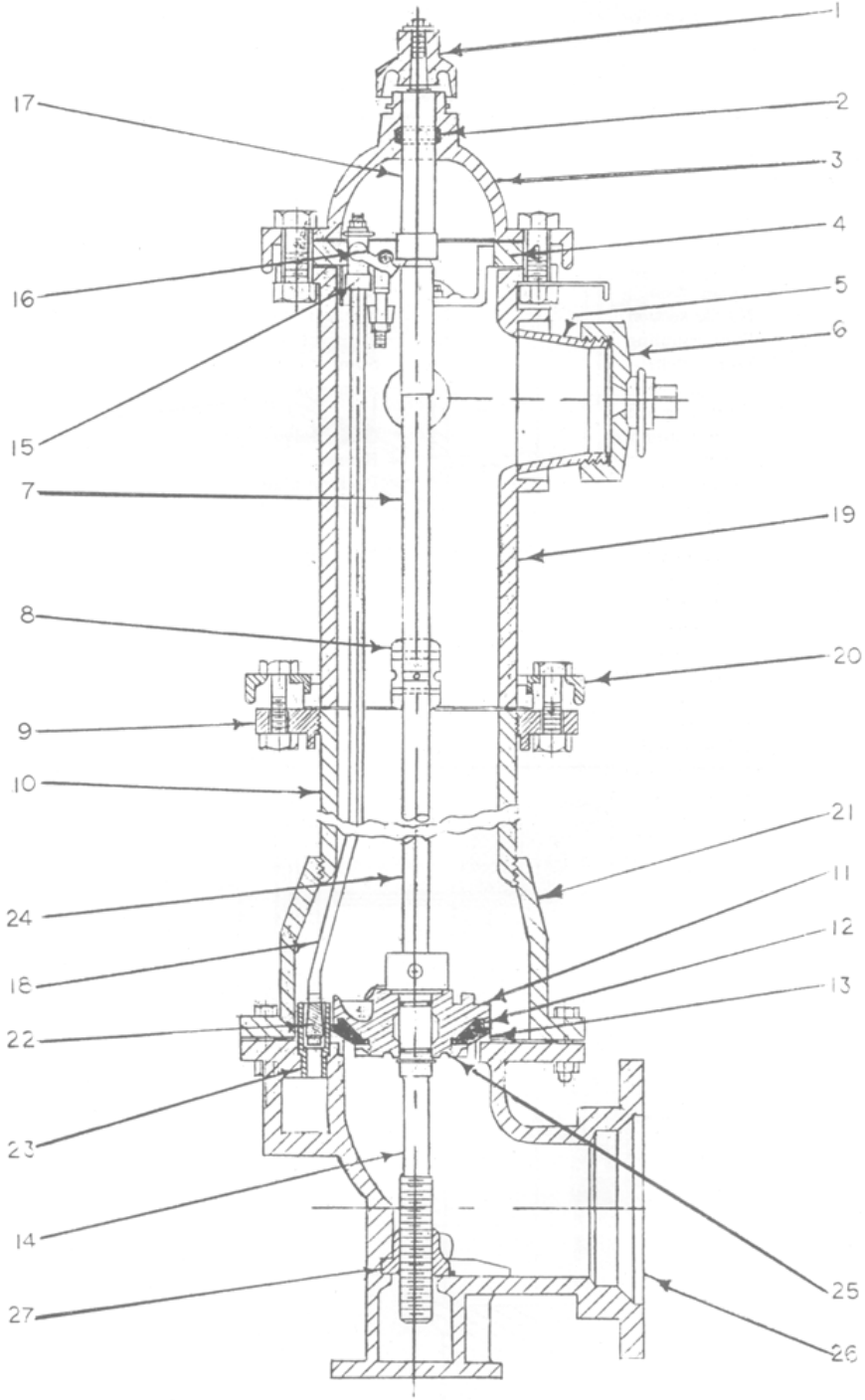

Eddy

Toggle or Scissor Type

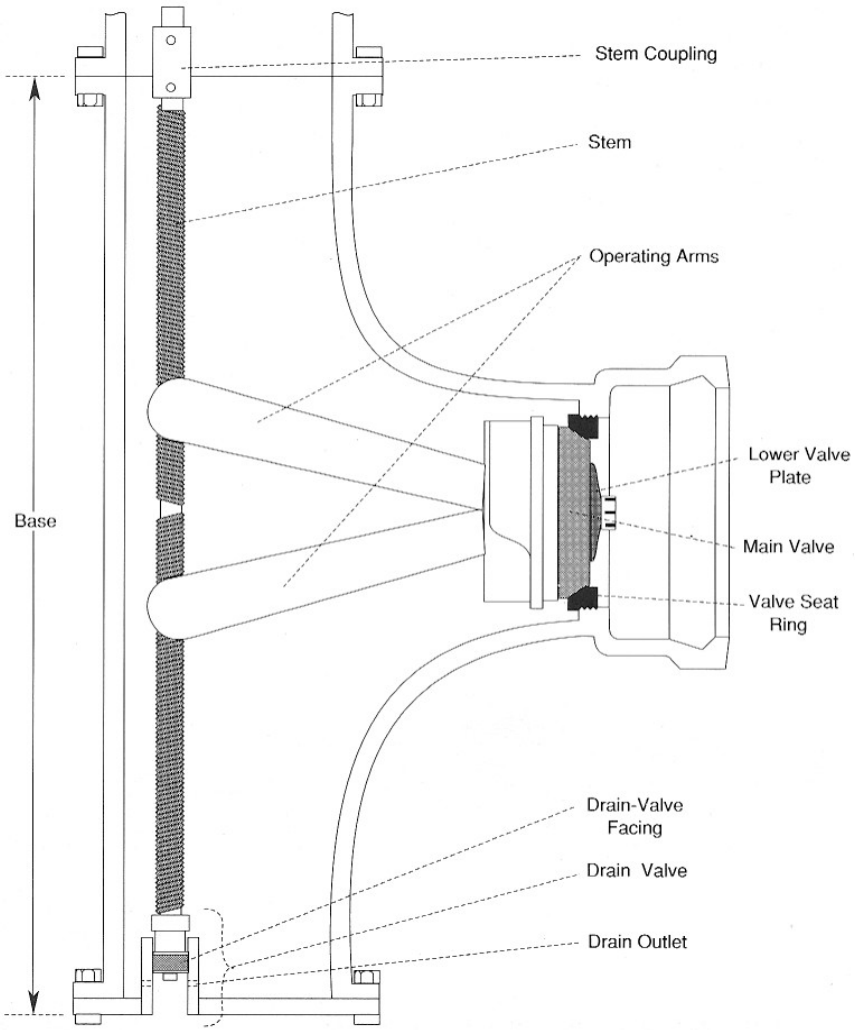

Iowa

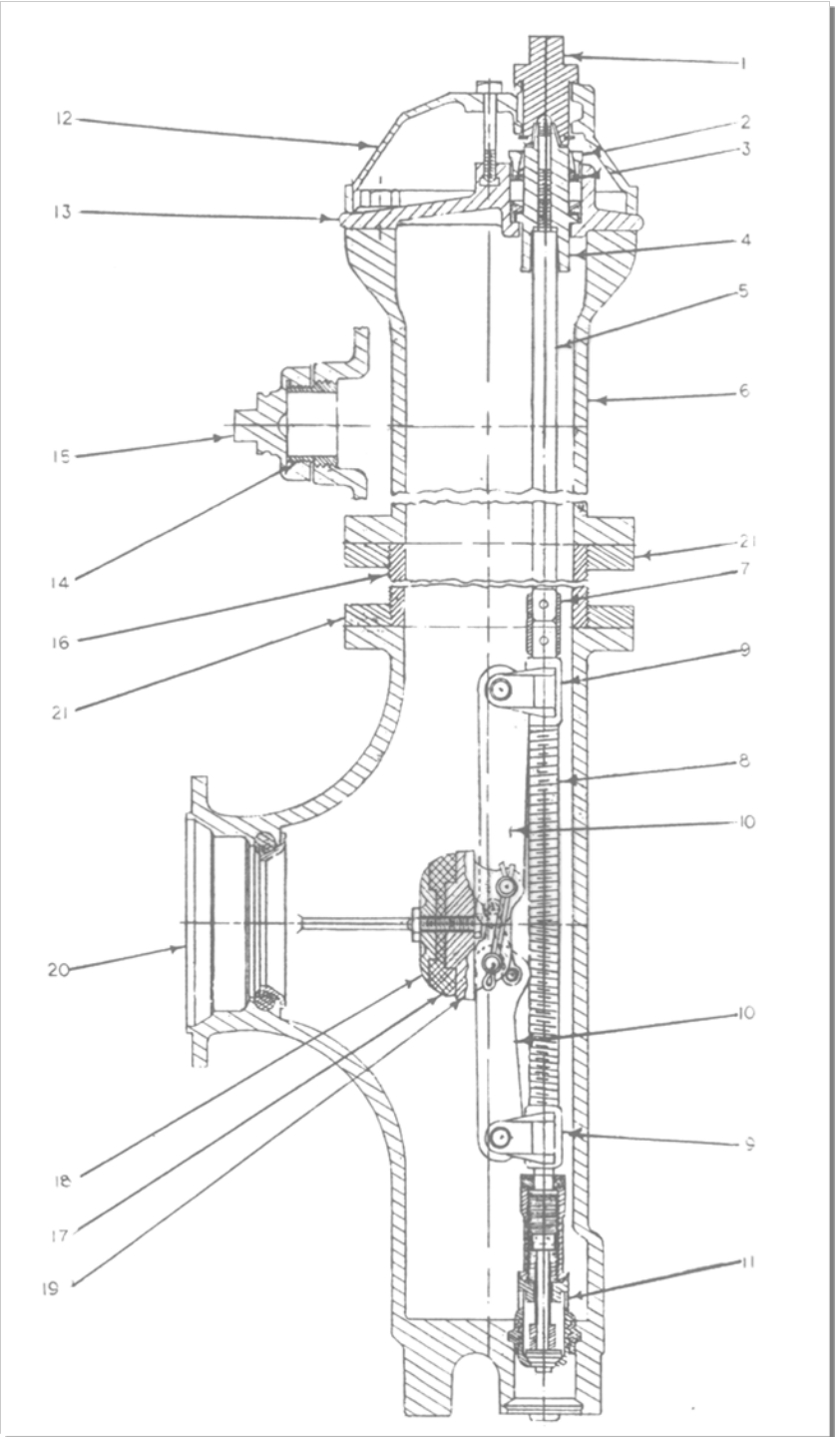

Iowa

Sliding Gate Type

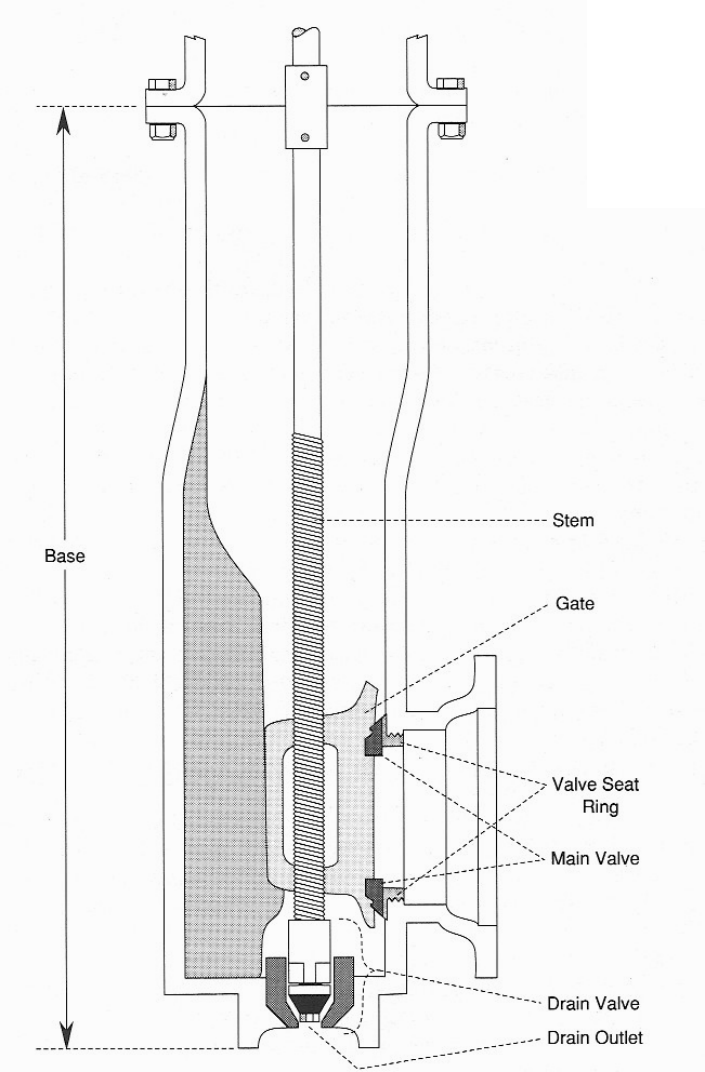

Terminal City

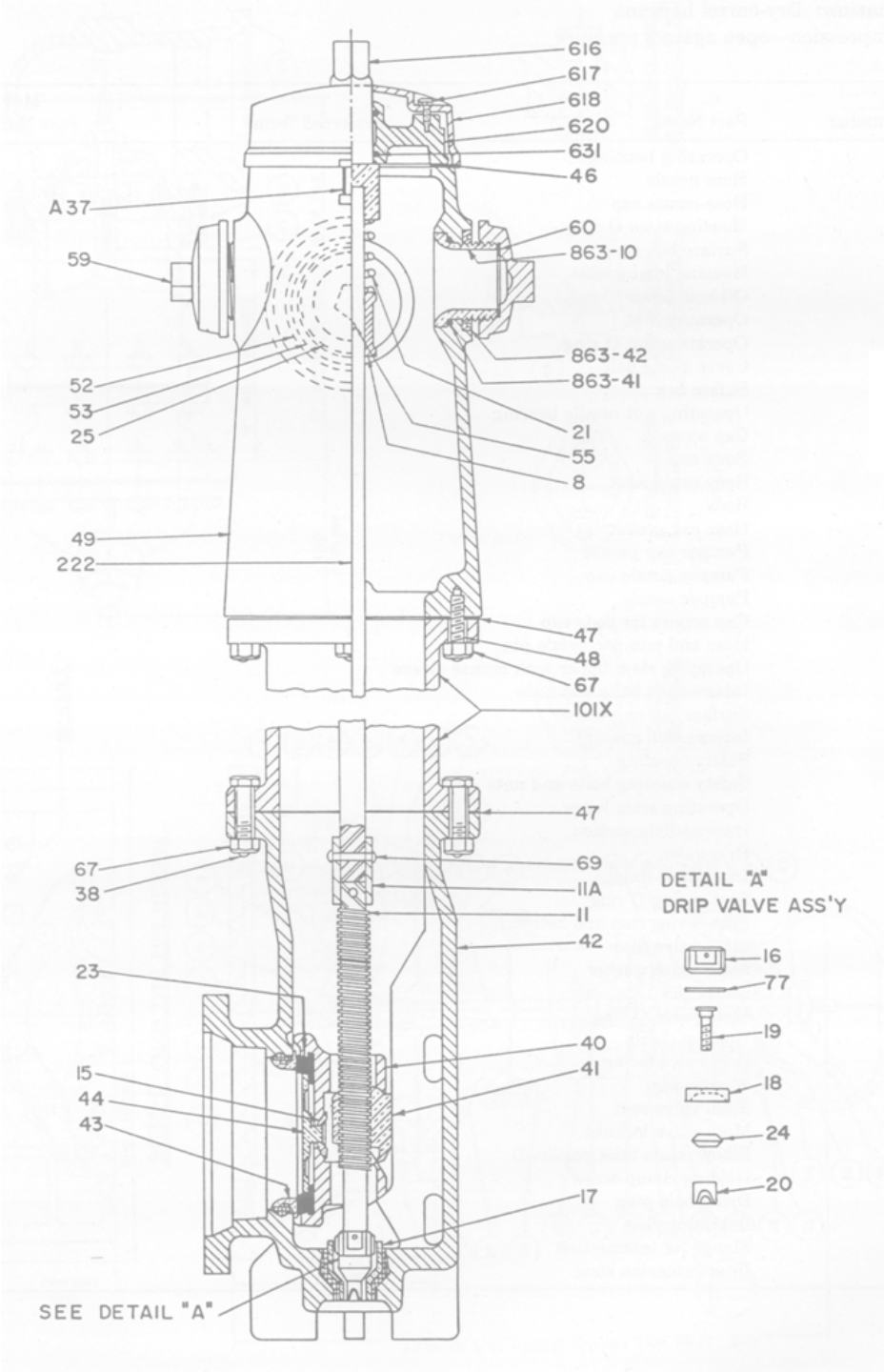

Terminal
City

STANDARDS and SPECIFICATIONS

Introduction

- Standards? - Specifications?
- We will explain the difference between standards and specifications
- Standards bring stability to our industry
- Specifications give consistency to your water district

Agenda

- AWWA
- UL/FM
- Fire Hydrants
- Gate Valves
- Indicator Posts
- Coatings

Overview

- Standards and Specifications are needed
- They affect many of the products in your system
- Know your system requirements

Vocabulary

- Standards -An acknowledged measure of comparison for quantitative or qualitative value.

  Benchmark, Gauge, Measure, Yardstick

  “A point of reference”

Vocabulary

- Specification -

Exact statement of particulars, especially a statement prescribing materials, dimensions, and quality of work for something to be built, installed or manufactured.

To specify - To state explicitly or in detail.

AWWA

• Dry Barrel Fire Hydrants	C-502-94
• IBBM Gate Valve	C-500-02
• Resilient Wedge Valve	C-509-01
• Reduced-Wall RWGV	C-515-01
• Coatings	C-550-01

UL/FM

- Underwriters Laboratories
- Factory Mutual Research Corporation

Underwriters Laboratories

- Fire Hydrant UL-246
- Valves UL-262
- Indicator Post UL-789

Factory Mutual

- Fire Hydrant Class No. 1510
- Valves Class Nos. 1120 & 1130
- Indicator Post Class No. 1110

Summary

- Standards are Benchmarks
- Specifications are Detailed Requirements
- Make your Specifications fit your system

Where to get more information

- AWWA Standards Manual
- Underwriters Laboratories
- Factory Mutual Research Corporation

Inspecting and Installation

- Pre-installation Inspection Procedures
- Installation Guidelines
- Testing Hydrant Operation

Pre-installation Inspection

- Check for damage
- Ensure built to specifications
- Ensure all components are present
- Tighten Bolts
- Cycle Hydrant-Check for ease of operation
- Observe the main valve moves away from its seat

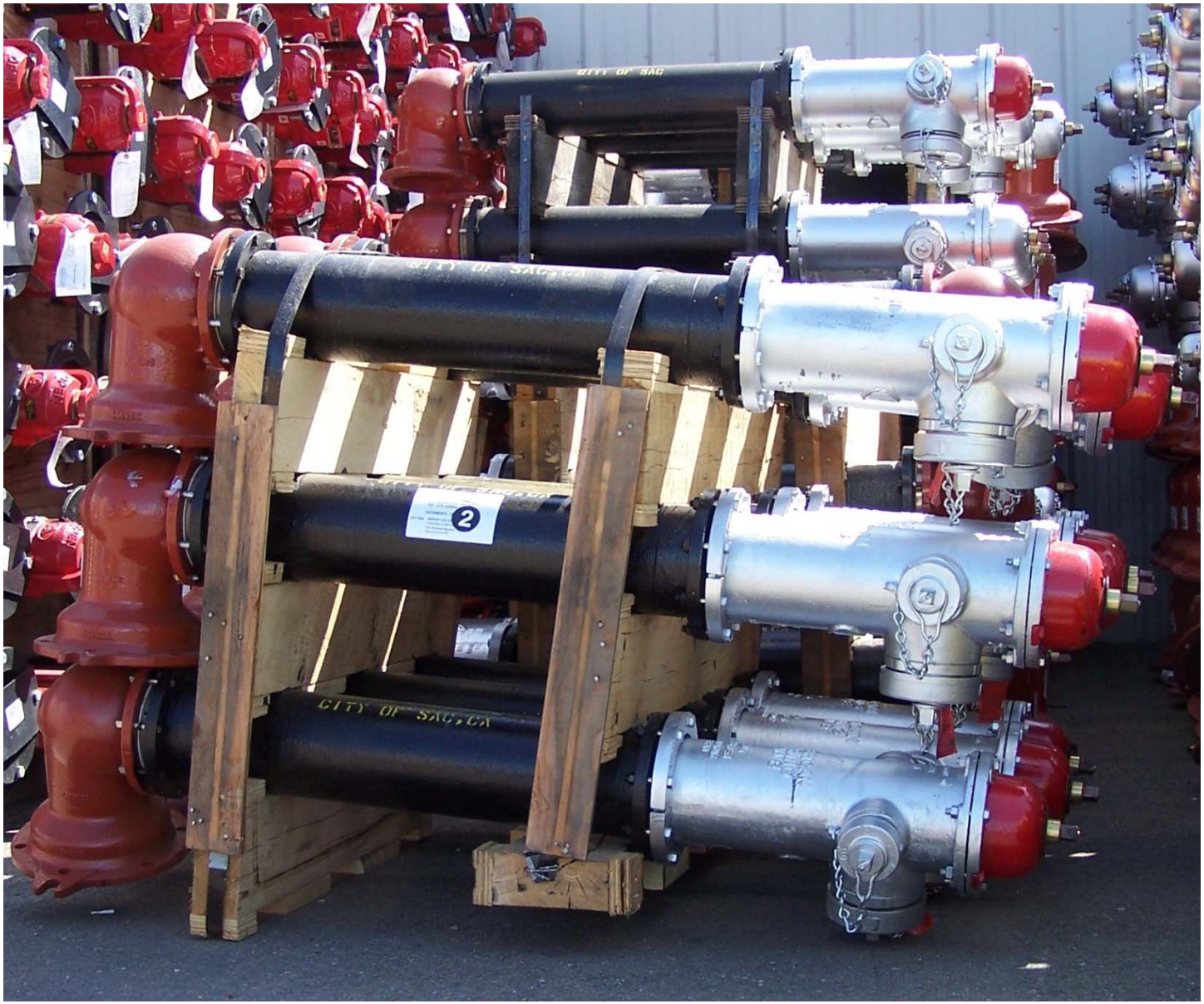
CITY OF SAC
CITY OF SAC, CA
2
CITY OF SAC, CA

DAVIS, CA
DAVIS, CA
DAVIS, CA
3
AMERICAN
ARING
VALVE
AMERICAN
ARING
VALVE
AMERICAN
ARING
VALVE

Pre-installation Inspection

- Check for damage
- Ensure built to specifications
- Ensure all components are present
- Tighten Bolts
- Cycle Hydrant-Check for ease of operation
- Observe the main valve moves away from its seat

Pre-installation Inspection

- Check for damage
- Ensure built to specifications
- Ensure all components are present
- Tighten Bolts
- Cycle Hydrant-Check for ease of operation
- Observe the main valve moves away from its seat

Pre-installation Inspection

- Check for damage
- Ensure built to specifications
- Ensure all components are present
- Tighten Bolts
- Cycle Hydrant-Check for ease of operation
- Observe the main valve moves away from its seat

Pre-installation Inspection

- Check for damage
- Ensure built to specifications
- Ensure all components are present
- Tighten Bolts
- Cycle Hydrant-Check for ease of operation
- Observe the main valve moves away from its seat

Pre-installation Inspection

- Check for damage
- Ensure built to specifications
- Ensure all components are present
- Tighten Bolts
- Cycle Hydrant-Check for ease of operation
- Observe the main valve moves away from its seat

Hydrant Installation Concerns

- Well drained soil
- Firm foundation support
- Base below frost line
- Inlet & main clean of foreign matter
- Clean hydrant
- Support hydrant
- Plumb hydrant
- Pipe restraints
- Check hydrant drain holes
- Provide drain rock
- Cover drain rock
- First backfill over pipe
- Open main valve
- Check for leaks
- Flush hydrant
- Close hydrant
- Backfill

Nomenclature: Installation Terms

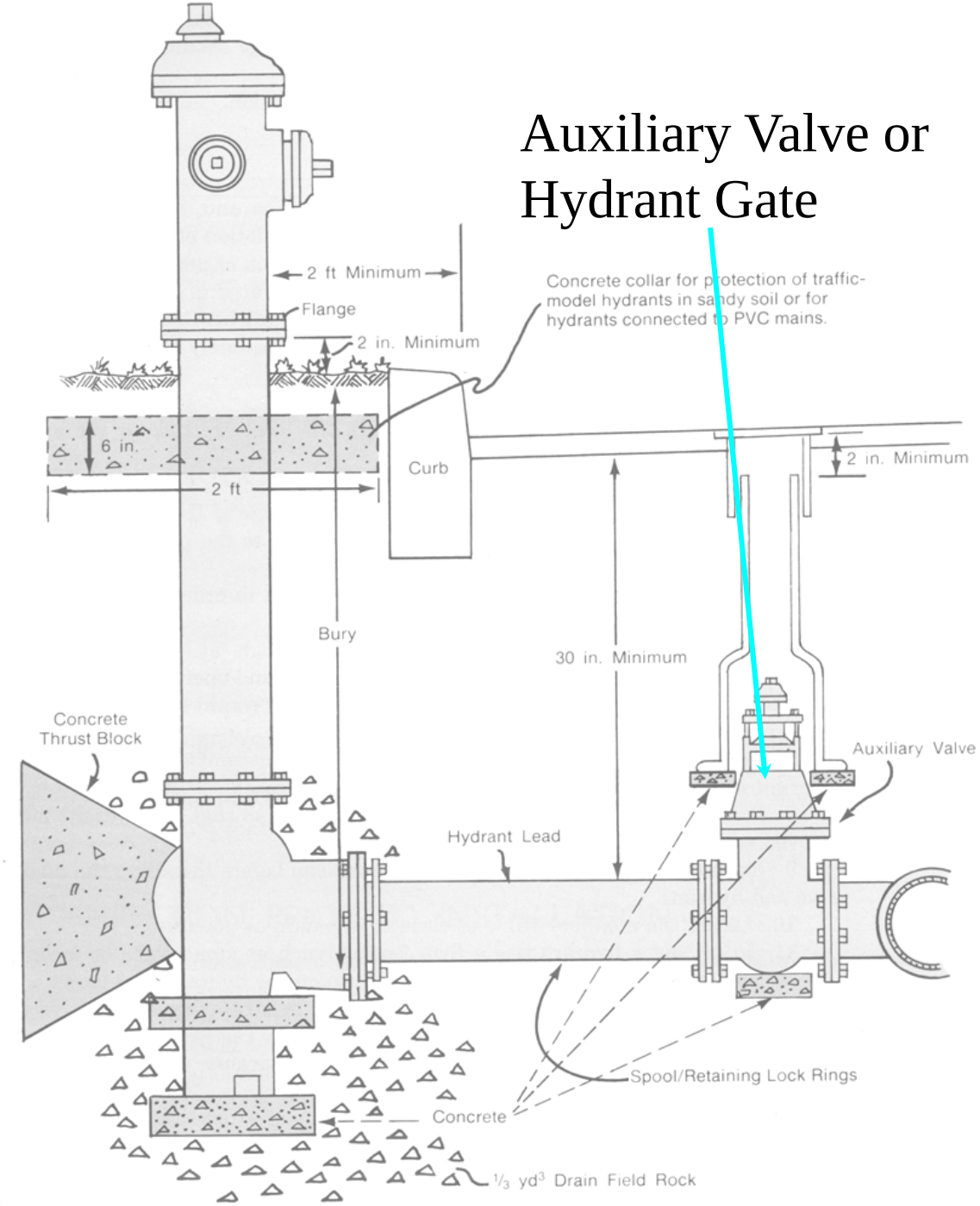

Installation Guidelines

- Connect to lines large enough to handle flows
- Locate according to local codes
- If no codes…two foot set back from curb or roadway
- Excavate trench so that as horizontal as possible
- Excavate a pit under hydrant and fill w/gravel
- Set hydrant as plumb as possible

Installation Guidelines

- Connect to lines large enough to handle flows
- Locate according to local codes
- If no codes…two foot set back from curb or roadway
- Excavate trench so that as horizontal as possible
- Excavate a pit under hydrant and fill w/gravel
- Set hydrant as plumb as possible

Typical Hydrant Installation

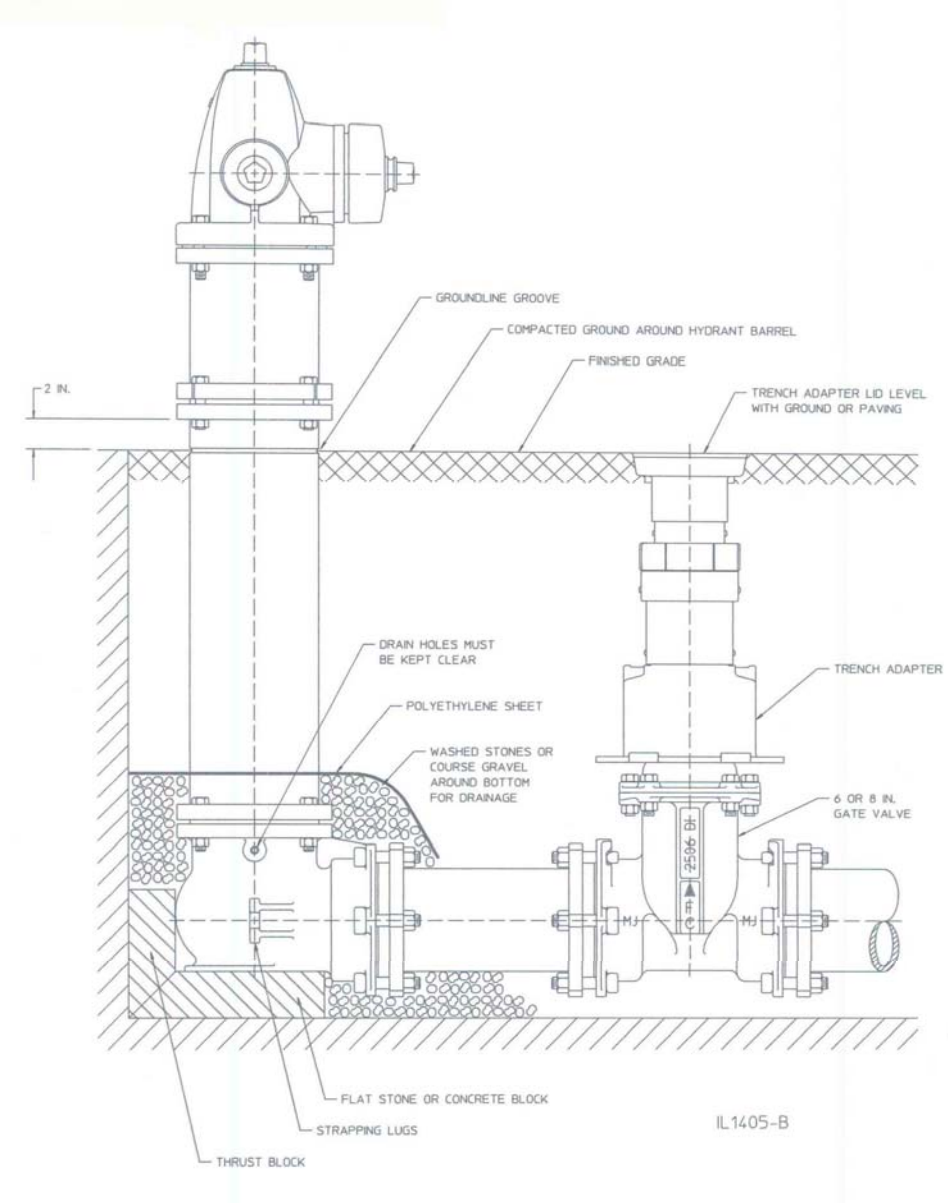

LEXUS
302 · UXD
SEATTLE

WATERMAN

L306
FREIGHTLINER
24-1400
24296D

Nomenclature: Installation Terms

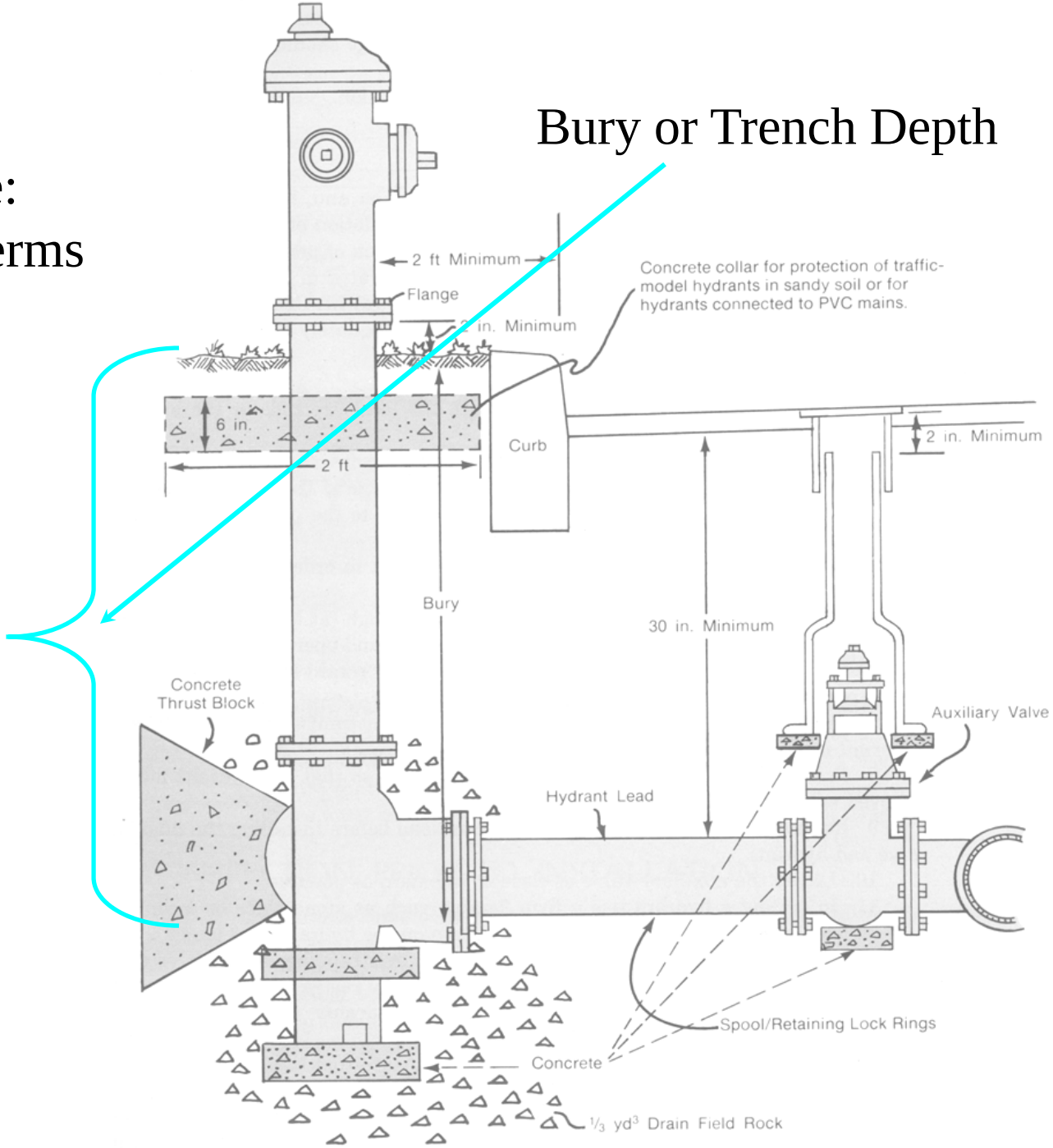

Nomenclature: Installation Terms

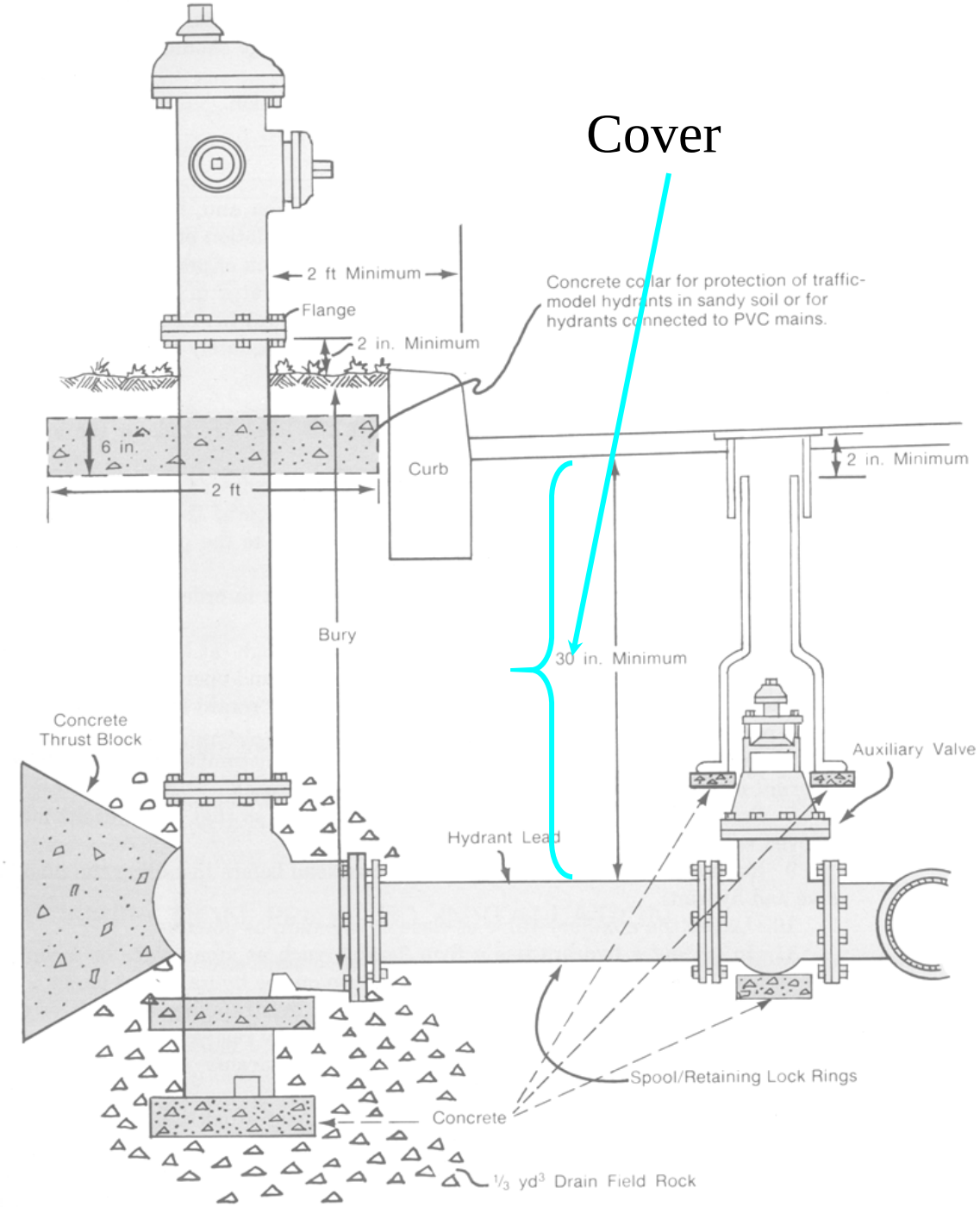

Nomenclature: Installation Terms

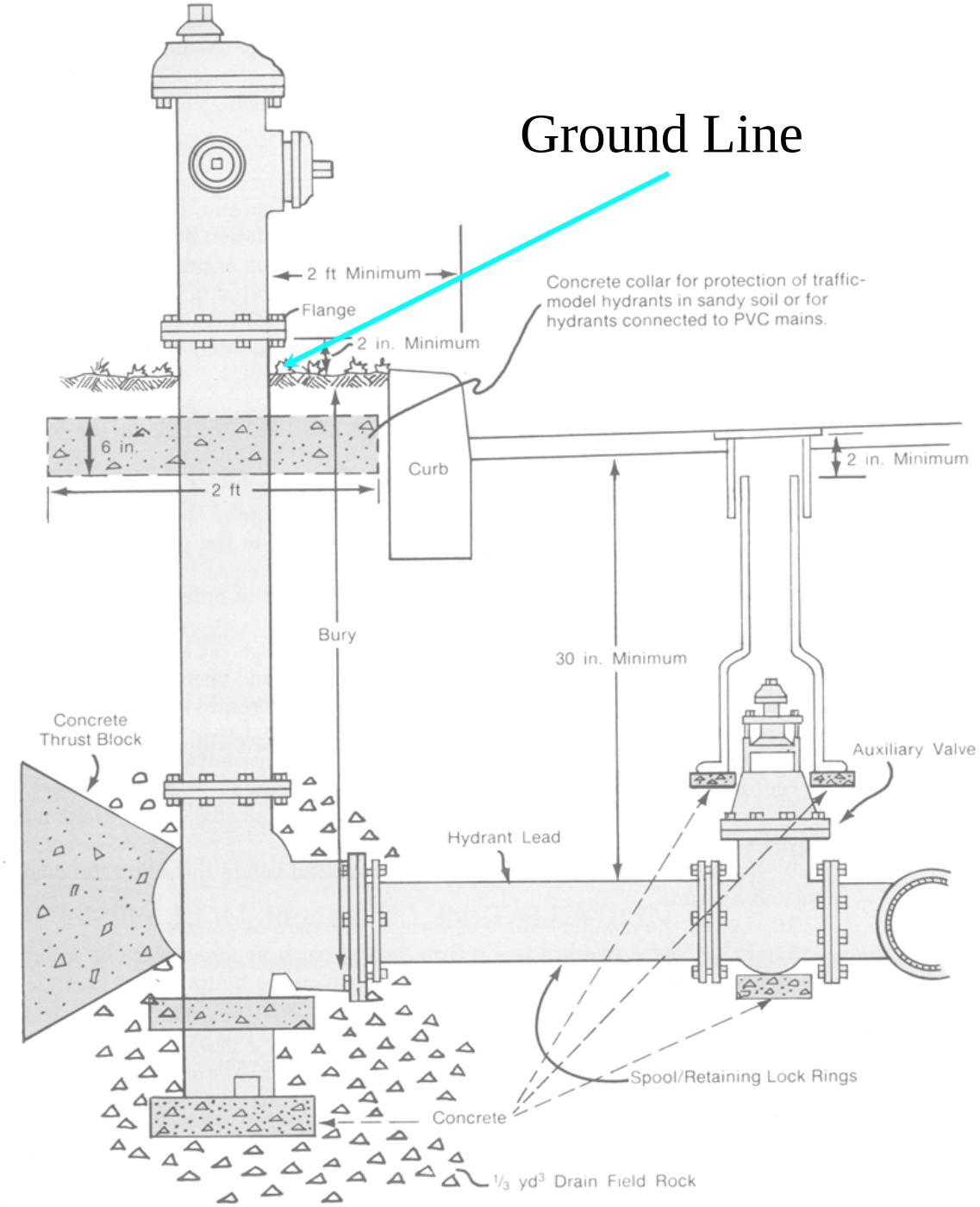

Nomenclature: Installation Terms

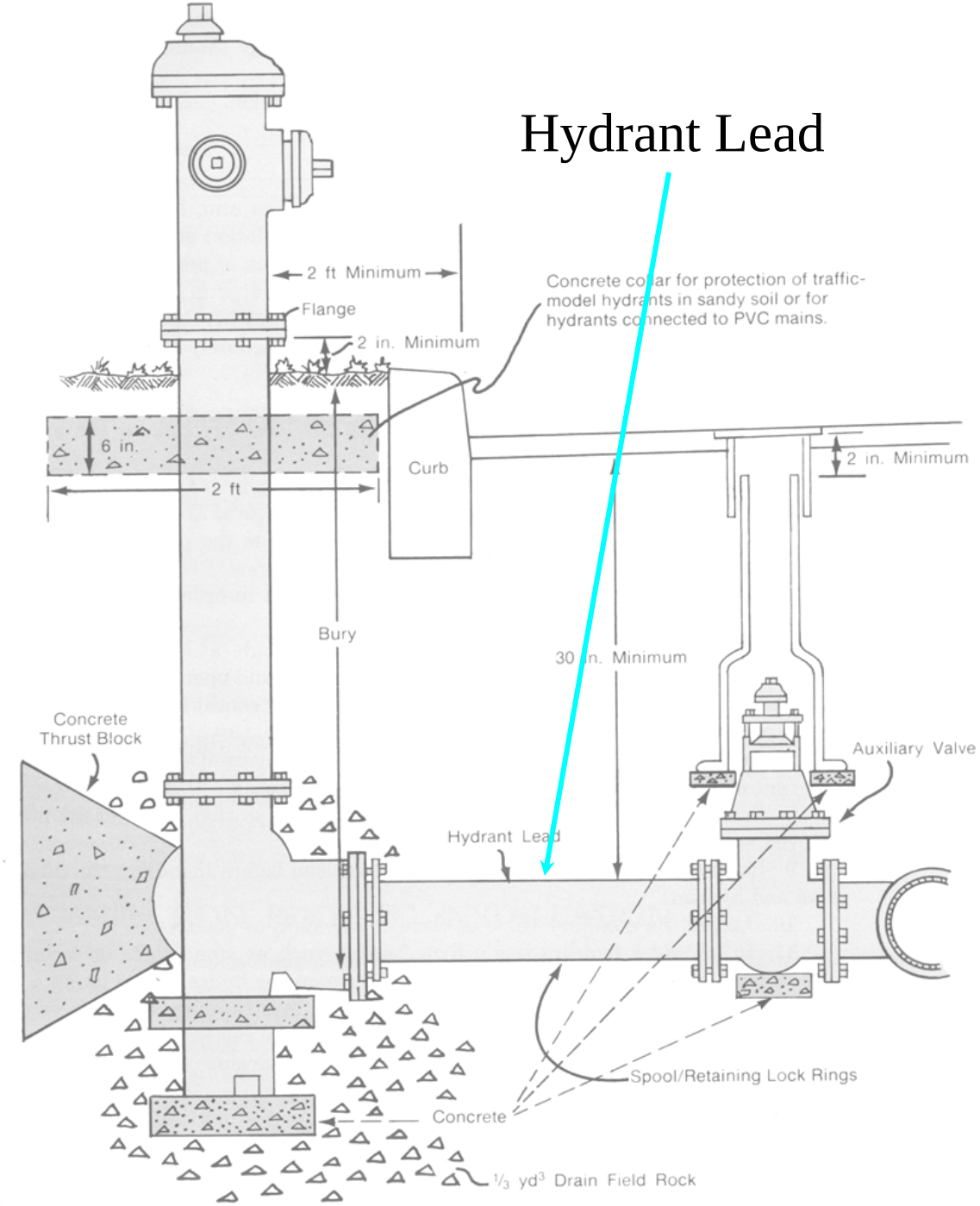

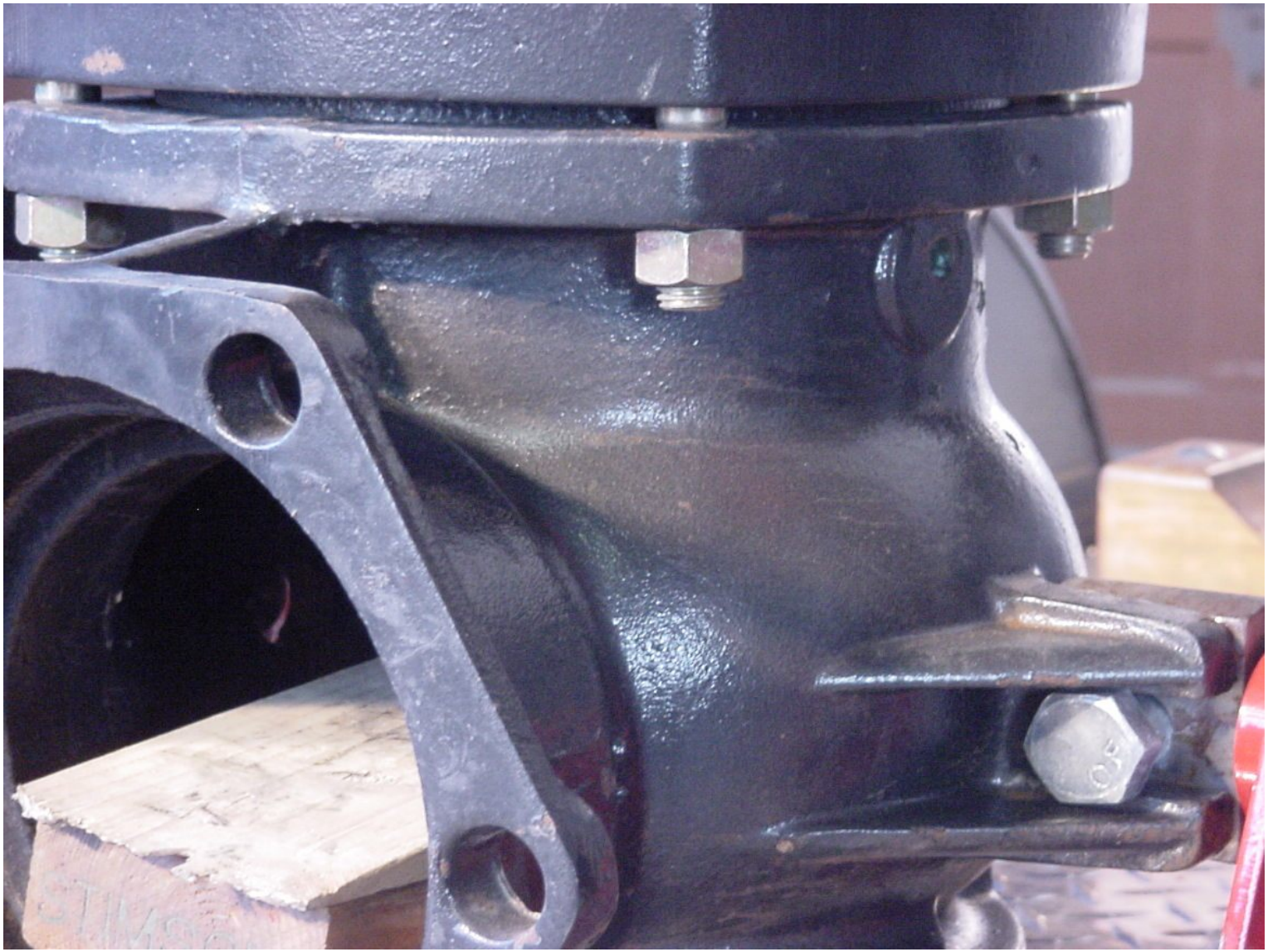

HYDRANT INSPECTION REPORT

Hyd. No.		
Location		
Pressures	Nozzle	
	Initial	
	Resid.	
	Pitot	
Flow *gpm*		
Time Flushed *min*		
Water Used *gal*		
Paint		
Chains		
Caps		
Stems		
Packing		
O Ring		
Top Nut		
Valve		
Valve Seat		
Cond. of Water		
Remarks		

By_____ Date_____

Fire Hydrant Security

- Why Hydrant Security
- Types
  - Op-nut
  - Cap
  - Check valve
- EPA and Homeland Security

Operating Nut Security

Operating Nut Security

Operating Nut Security

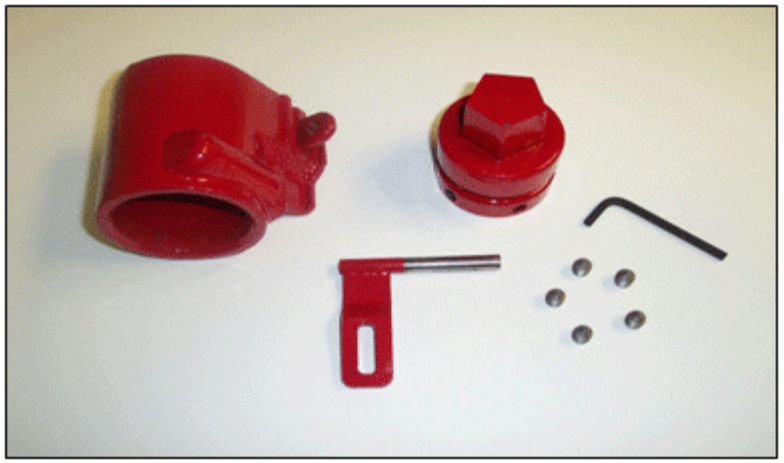

Nozzle Cap Security

Nozzle Cap Security

Nozzle Cap Security

Nozzle Cap Security

Maintaining Hydrants

- Develop a checklist
- Inspect & operate annually – minimum
- Visually inspect for rust & wear
- Check nuts, bolts, couplers and nozzle caps
- Remove cap and check barrel for water.
- Remove valve seat & inspect
- Slowly open hydrant and check nozzle caps for leaks
- Check hydrant drain

Lubricate nozzles with grease
Flush hydrant
Lubricate stem
Record date, status and repairs
If damaged and not immediately repairable, bag and notify fire district
Remember to open and close hydrant slowly!!

Hydrant Servicing Order

- Start at the reservoir, tank or pump station and work downstream

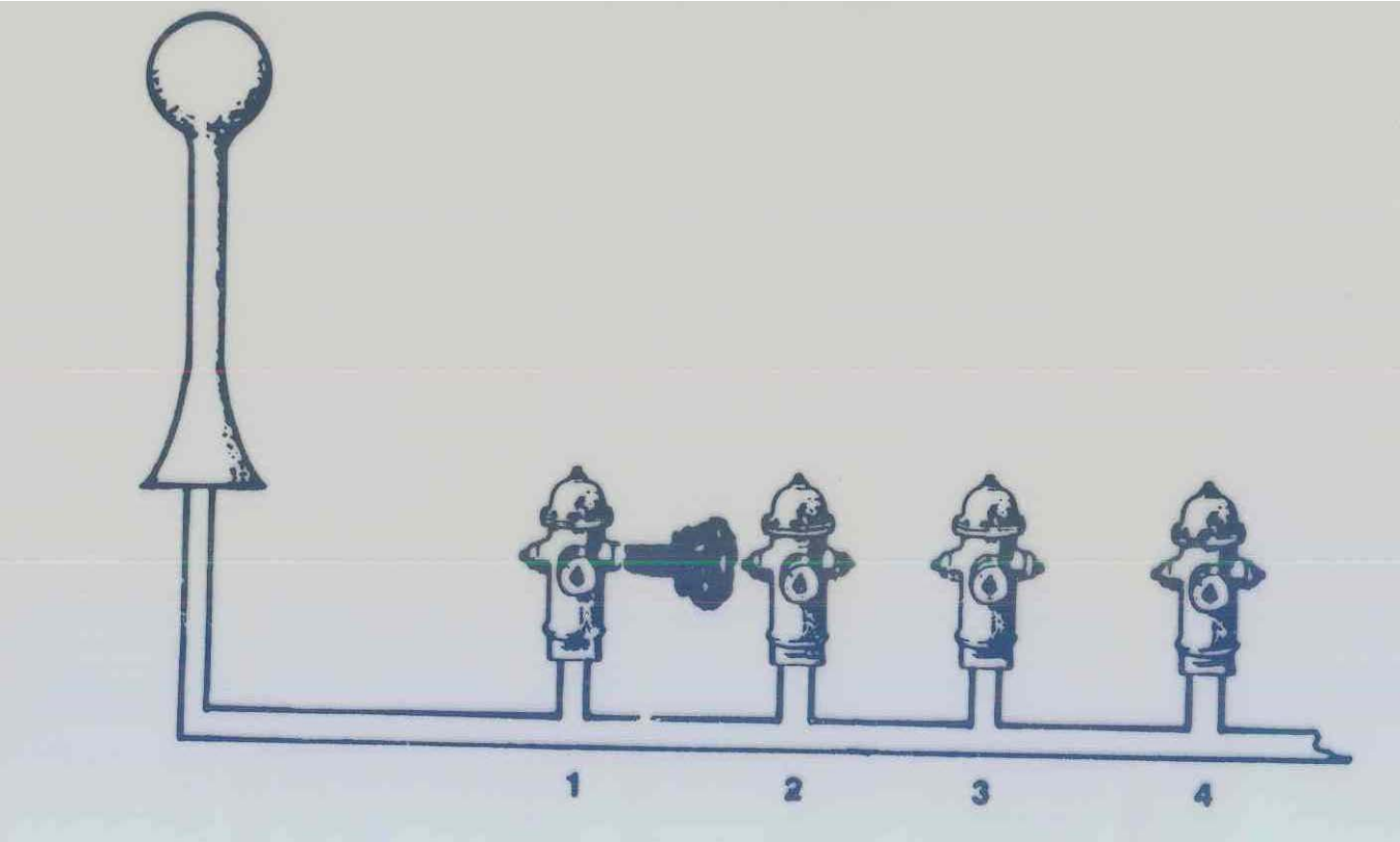

Pacer Traffic Repair

Nozzle Replacement

- Leaded Nozzle
- Threaded Nozzles
- Mechanically Attached

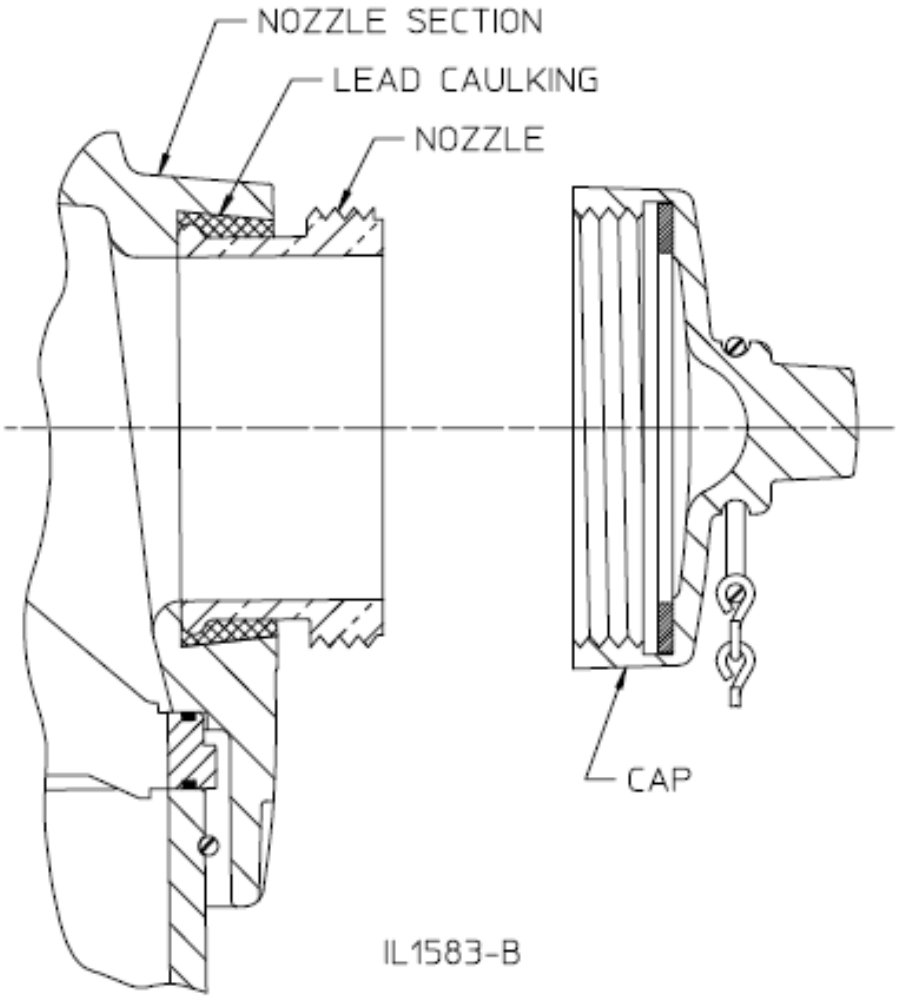
NOZZLE SECTION
LEAD CAULKING
NOZZLE
CAP
IL1583-B

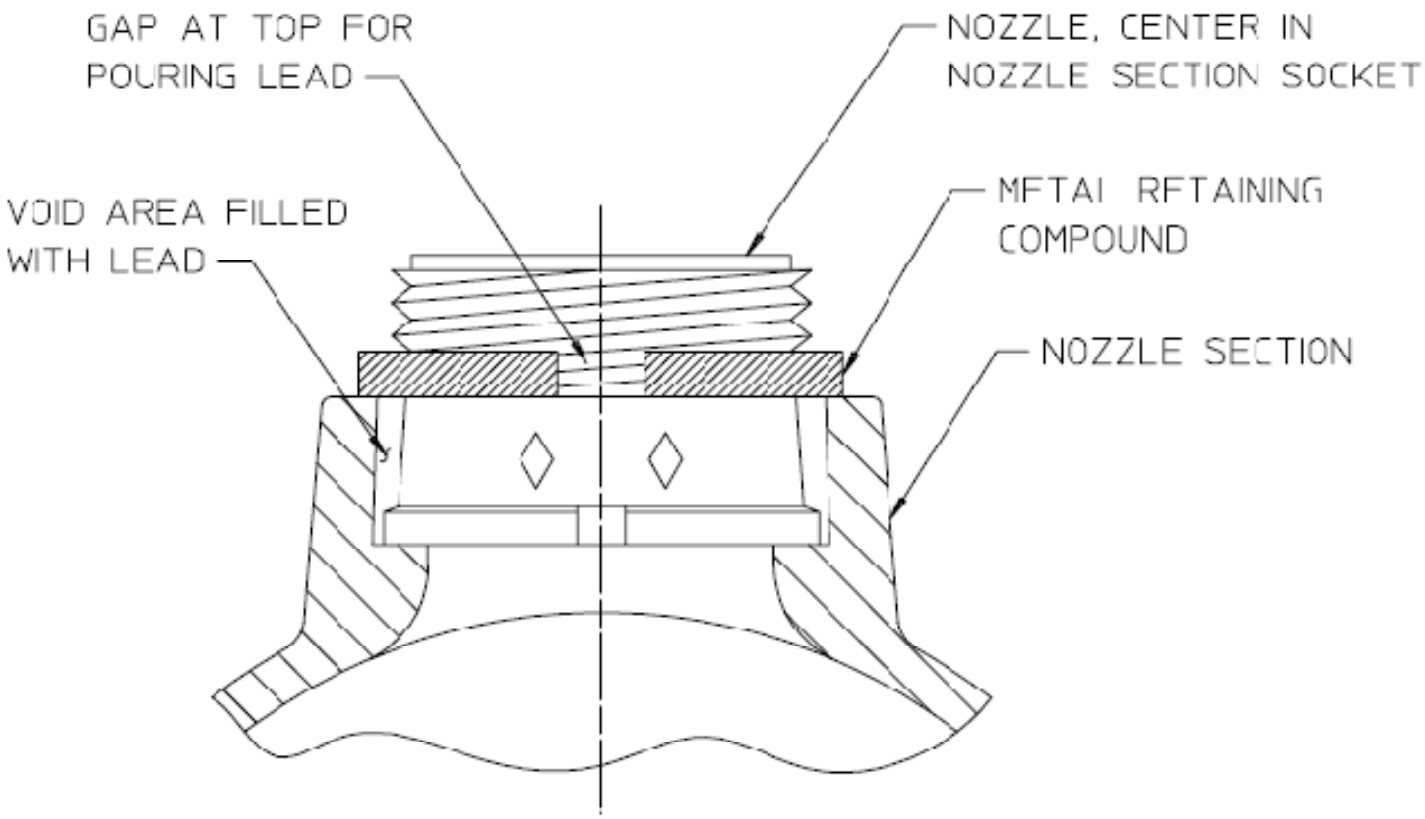
GAP AT TOP FOR
POURING LEAD
NOZZLE, CENTER IN
NOZZLE SECTION SOCKET
VOID AREA FILLED
WITH LEAD
METAL RETAINING
COMPOUND
NOZZLE SECTION

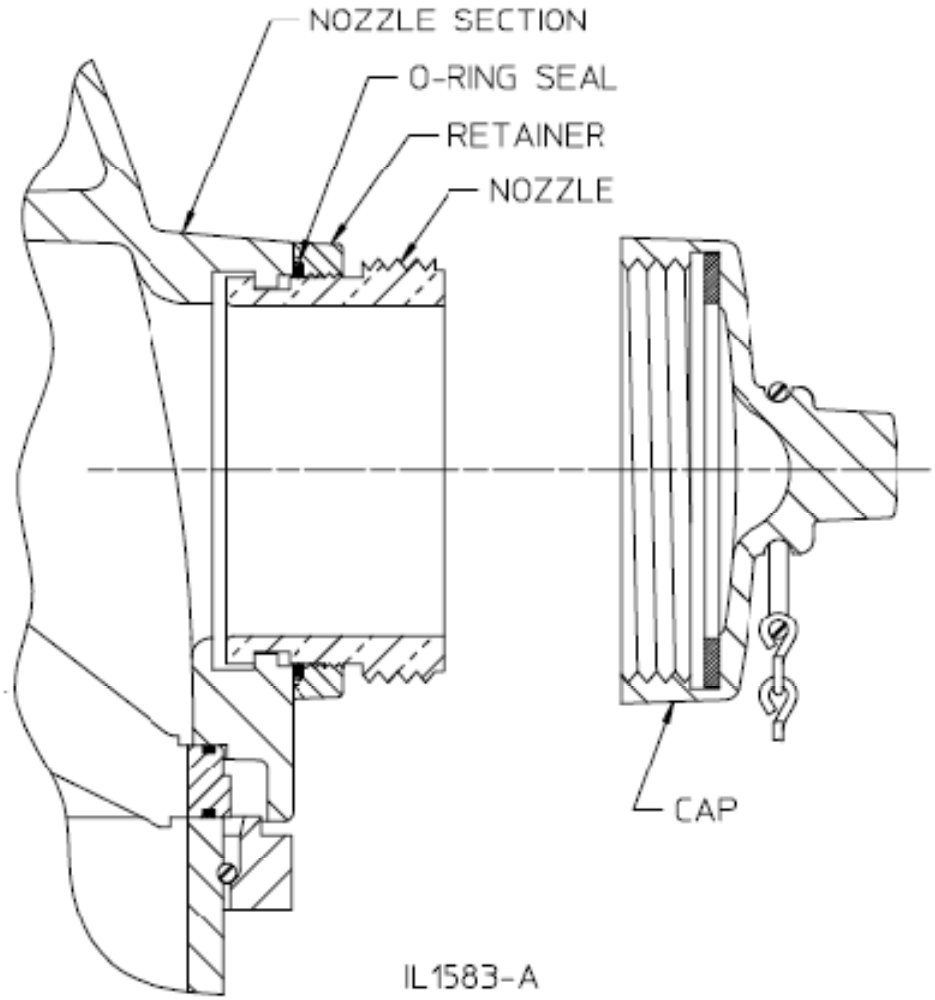
NOZZLE SECTION
O-RING SEAL
RETAINER
NOZZLE
CAP
IL1583-A

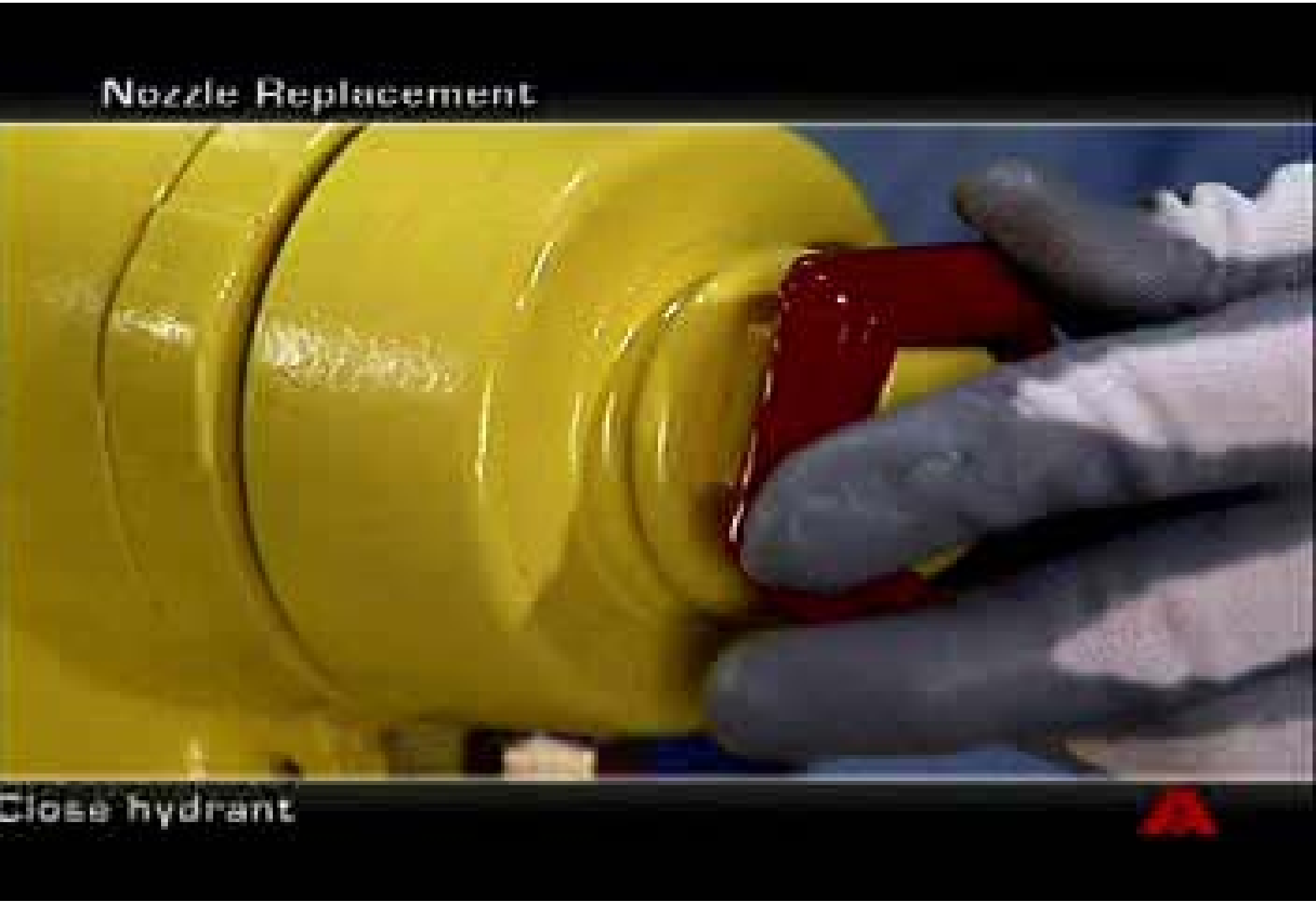
Nozzle Replacement
Close hydrant

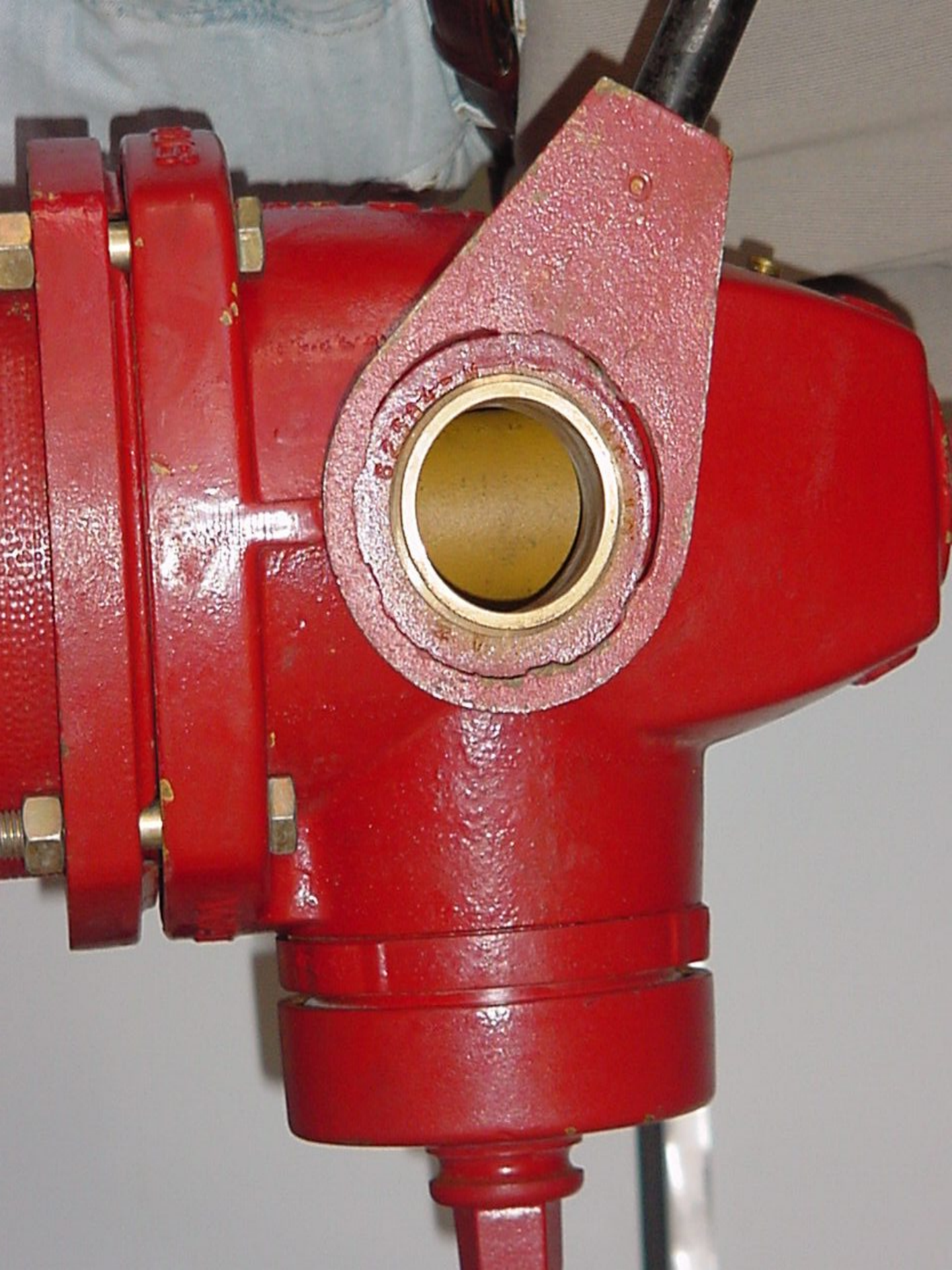

KENNEDY/D.T.
CLOW
MUELLER
MUELLER II
2500
WATEROUS

Value

Overhaul

- Follow detailed maintenance manual

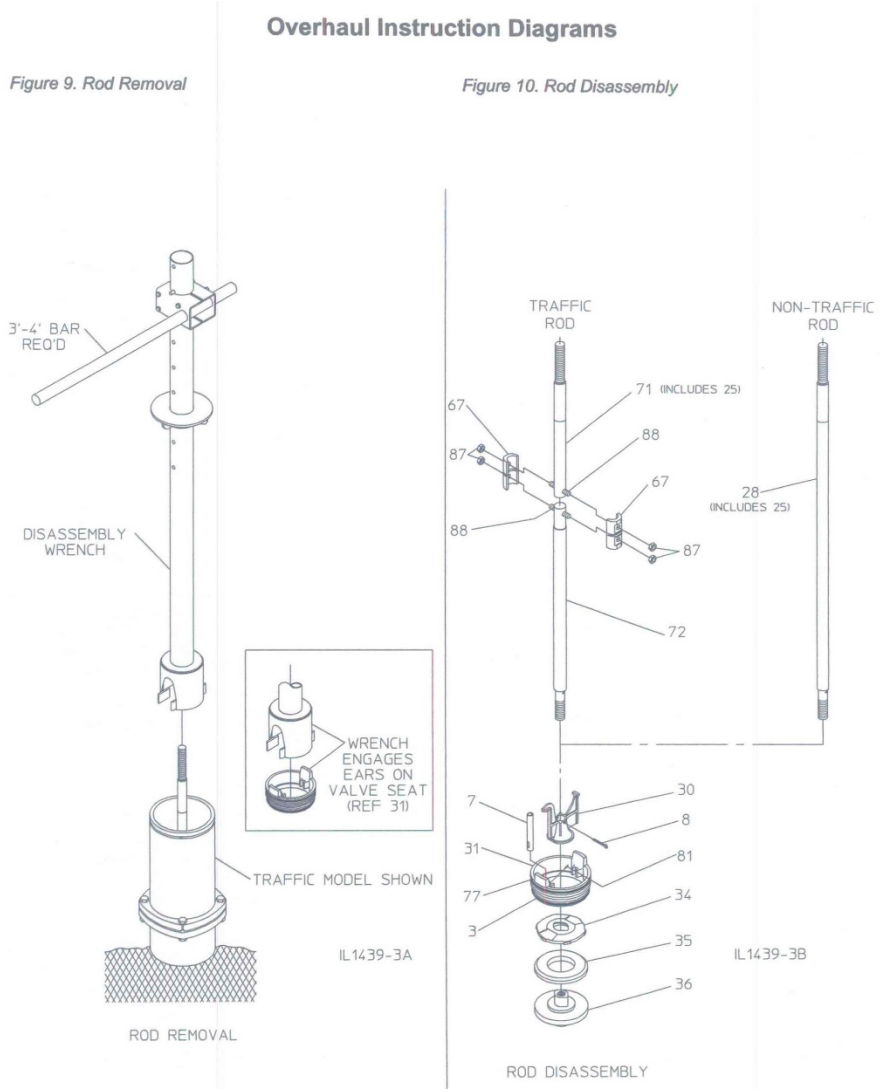

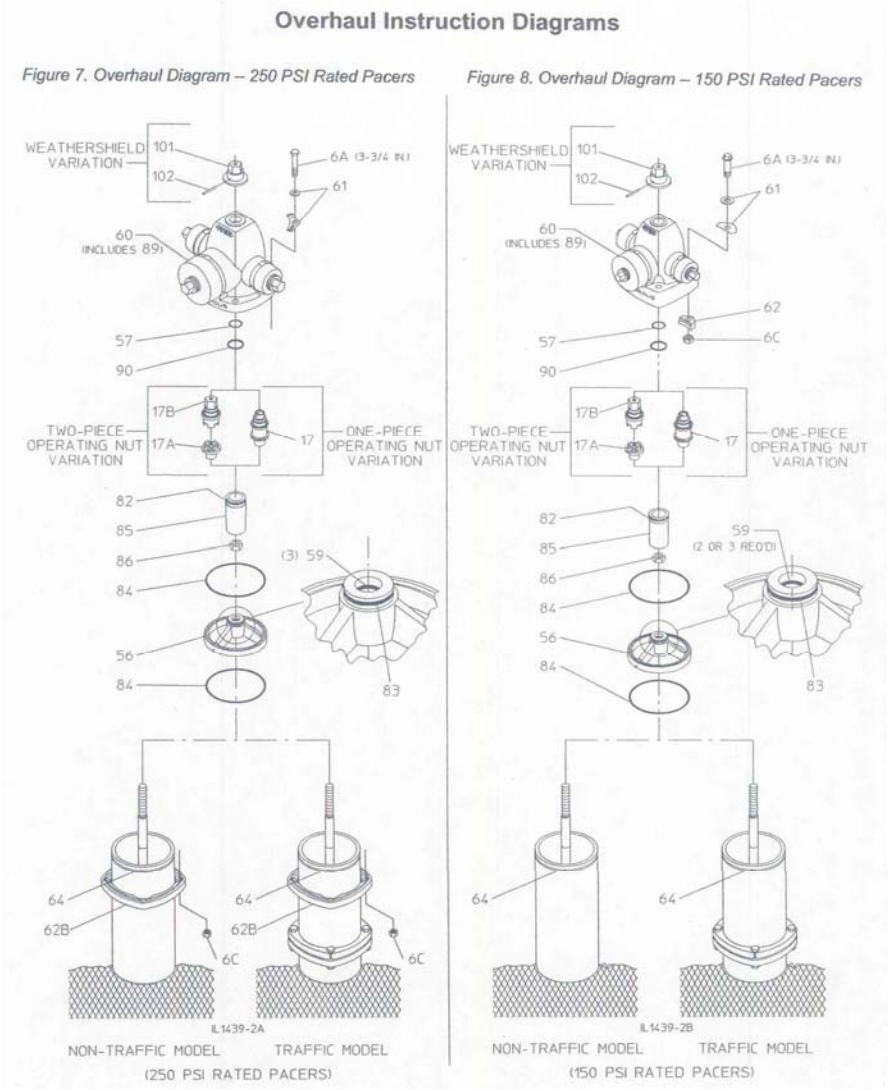

Record Keeping

- Preventative maintenance ensures that the hydrant will work when needed
- Record keeping can provide a preventative maintenance schedule and a record of maintenance and repairs performed
- ISO ratings are determined by the records kept

FIRE HYDRANT MASTER RECORD

Manufacturer _____ Date _____ Hydrant No. _____

Type _____ MVO _____ Inlet _____

Bury _____ Hose Outlet-Nozzle Size _____ Thread Type _____

Pumper Outlet-Nozzle Size _____ Thread Type _____

Installed by _____ Date _____ W/O No. _____ Cost _____

Operating Nut _____ Turns to Open _____

Location _____ Line Static Pressure _____

Date	Inspected	Tested	Repaired	Painted	Opened by	Cost	Remarks

Avenue

Property Line

Water Main—Size/Type

Right of Way

HYDRANT MAINTENANCE REPORT

Water Utility _____ Hydrant No. _____

Location _____

Caps Missing _____ Replaced _____ Greased _____

Chains Missing _____ Replaced _____ Freed _____

Paint O.K. _____ Repainted _____

Oper. Nut O.K. _____ Greased _____ Replaced _____

Nozzles O.K. _____ Caulked _____ Replaced _____

Valve & Seat O.K. _____ Replaced _____

Packing O.K. _____ Tightened _____ Replaced _____

Drainage O.K. _____ Corrected _____

Flushed _____ Minutes _____ Nozzle Open

Pressure Static _____ Residual _____ Flow _____ gpm

Branch Valve Condition _____

_____

Any Other Defects _____

_____

_____

_____

_____

Inspected _____ By _____

Defects Corrected _____ By _____

Troubleshooting

- **PROBLEM -** Operating nut turns freely but hydrant does not open.
- **SOLUTION -** Inspect rod coupling for breakage and insure rod pin is properly installed. Break coupling is likely broken.

Troubleshooting

- **PROBLEM -** Ground around hydrant is highly saturated.
- **SOLUTION -** Close hydrant and remove nozzle cap. Check with listening device to determine if water is passing by main valve. If it is determined that main valve is leaking try the following: a) Flush hydrant in fully open position (watch to see if rocks or other foreign objects flush out of barrel). b) After flushing for several minutes shut off hydrant. Watch for several minutes to see if flow stops. Place hand over open hose nozzle; suction should be felt indicating hydrant is no longer leaking and drains are working properly. c) If flushing does not solve problem it would indicate that something is trapped or has cut main valve rubber. Follow seat removing instructions to replace the valve. Check threads on bronze seat to be sure that it is not damaged. If threads appear worn or bent replace bronze seat. d) If replacing valve does not stop leakage, bolting at hydrant shoe may be loose or the base gasket is damaged. Hydrant must be excavated to make repair.

Troubleshooting

- **PROBLEM -** External leakage is noticed around the operating nut.
- **SOLUTION -** This indicates that O-Rings are cut or missing. O-Rings can be replaced without shutting off water. See repair section of manual for proper replacement.

Troubleshooting

- **PROBLEM -** Operating nut is extremely hard to turn.
- **SOLUTION -** Remove pipe plug in top of operating nut. Squirt one or two shots of food grade lubricating grease. If hydrant remains hard to operate replace thrust washers in hydrant head. If this does not solve problem inspect threads and make sure there is lubrication in lubrication chamber.

Troubleshooting

- **PROBLEM -** Water is dripping around nozzles.
- **SOLUTION -** Remove nozzle cap and replace cap gasket. Check nozzle to be sure that it is properly installed. Hydrants installed prior to 1980 used leaded-in nozzles. Nozzle may require re-caulking. If hydrant has a cast date of 1981 or later, it has an O-Ring behind nozzle. If leakage is coming from behind the nozzle, replace O-Ring.

Troubleshooting

- **PROBLEM -** Hydrant will not drain properly.
- **SOLUTION -** Check to be sure water table has not risen too high to allow for drainage. Flush hydrant to be sure drains are clear. Open hydrant slowly several turns while leaving caps firmly in place will insure hydrant drains are clear. Close hydrant and repeat this procedure. Do this slowly three or four times. If this does not solve problem, remove hydrant seat assembly and check rubber drain facings. If no problems are found, excavate hydrant to see if concrete or other materials have blocked drain holes.

B–84–B PARTS LIST

Darling

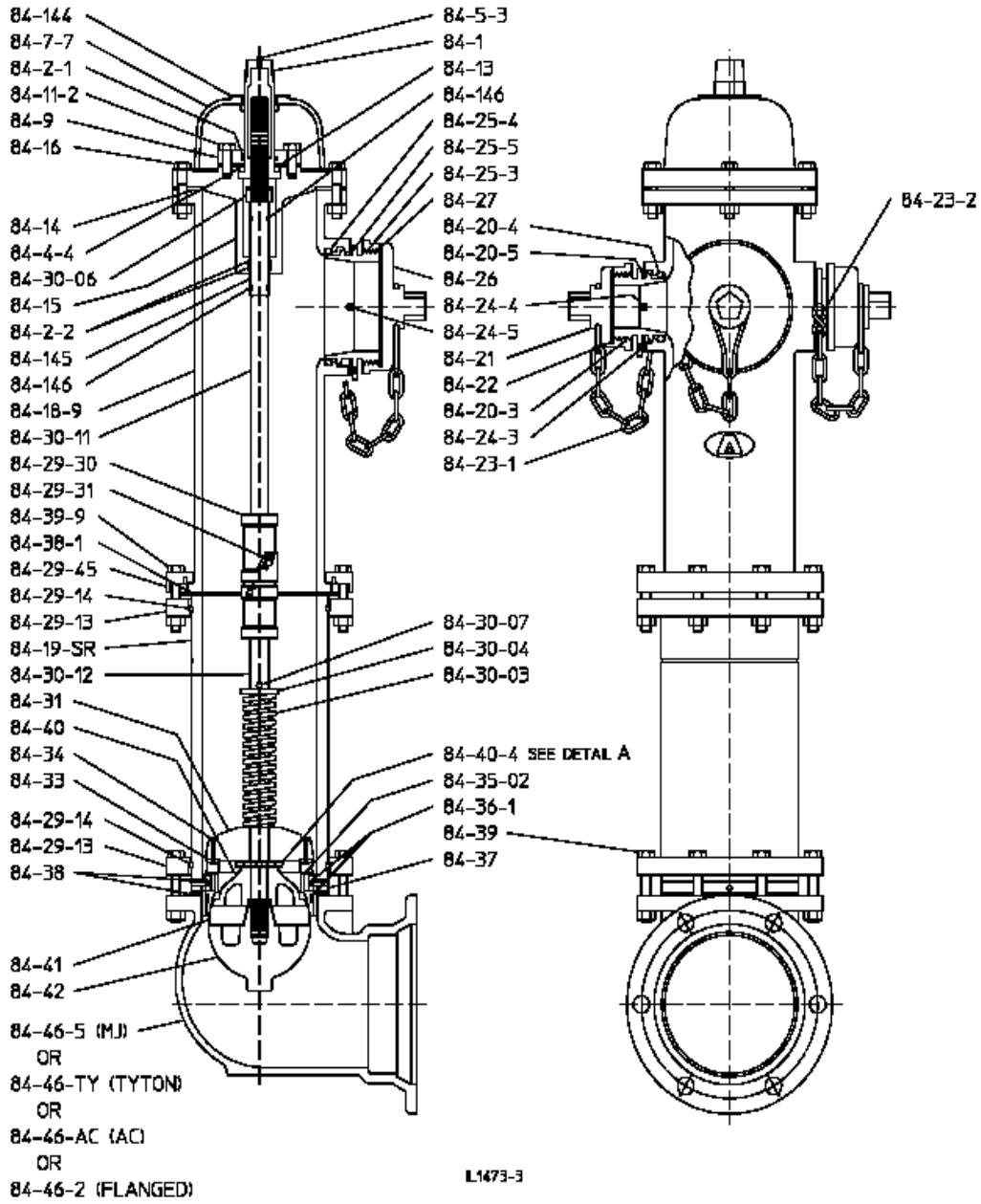

Waterous
Pacer

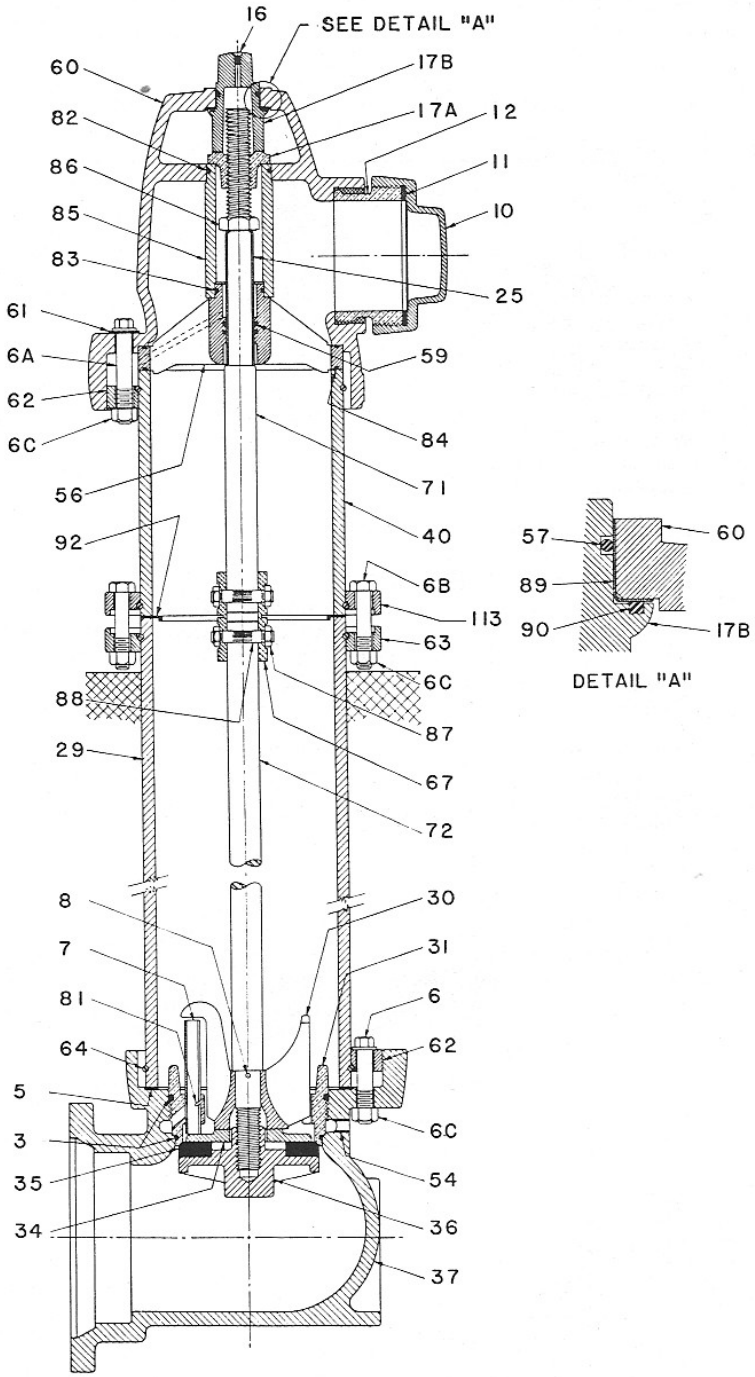

Fire Hydrant Operation and Maintenance

Questions?

Thanks for coming!

Charlie Sovacool
American Flow Control
csovacool@acipco.com

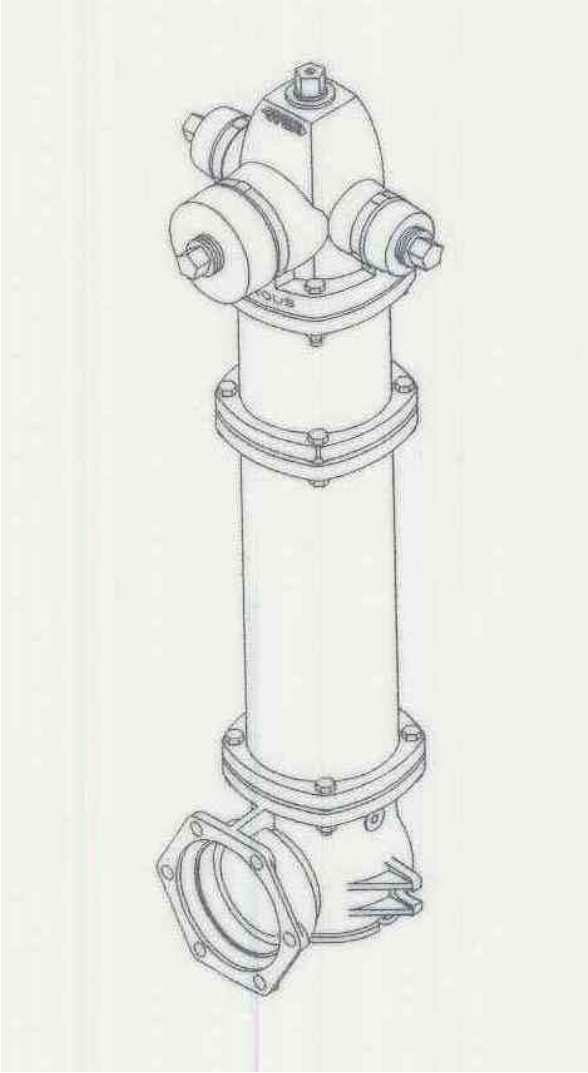

Valve Types

- Non-Rising Stem - NRS

Resilient Wedge NRS

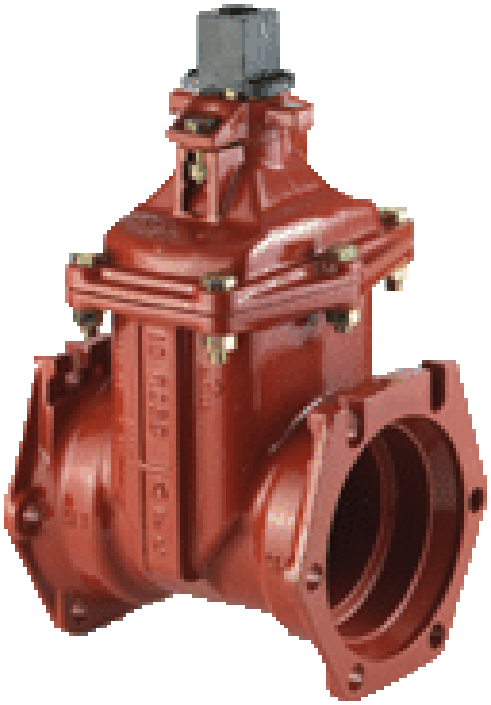

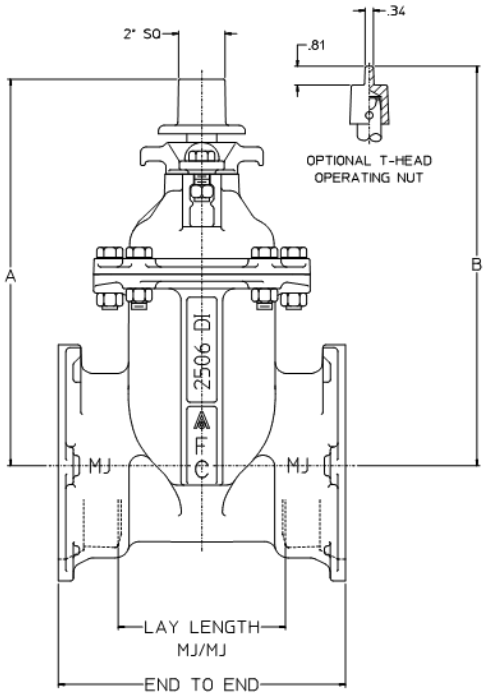

SHOWN WITH OPERATING NUTS

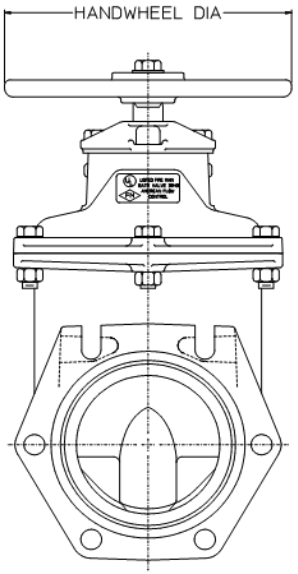

SHOWN WITH OPTIONAL HANDWHEEL

IL1442

Valve Types

- Non-Rising Stem – NRS
- Outside Screw and Yoke - OS&Y

Resilient Wedge OS&Y

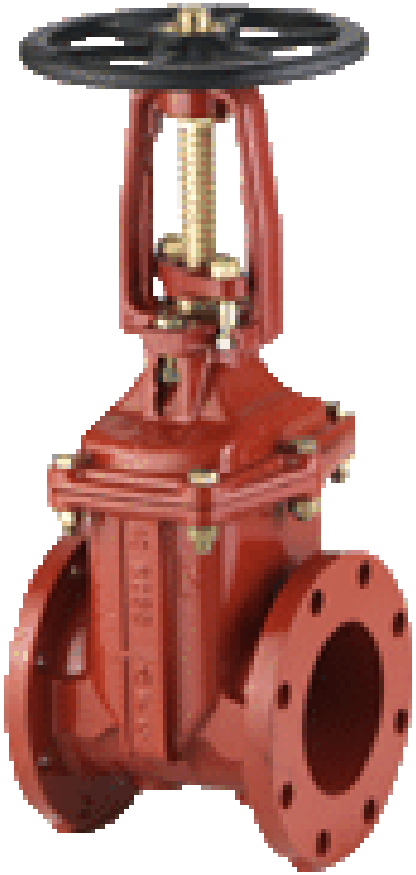

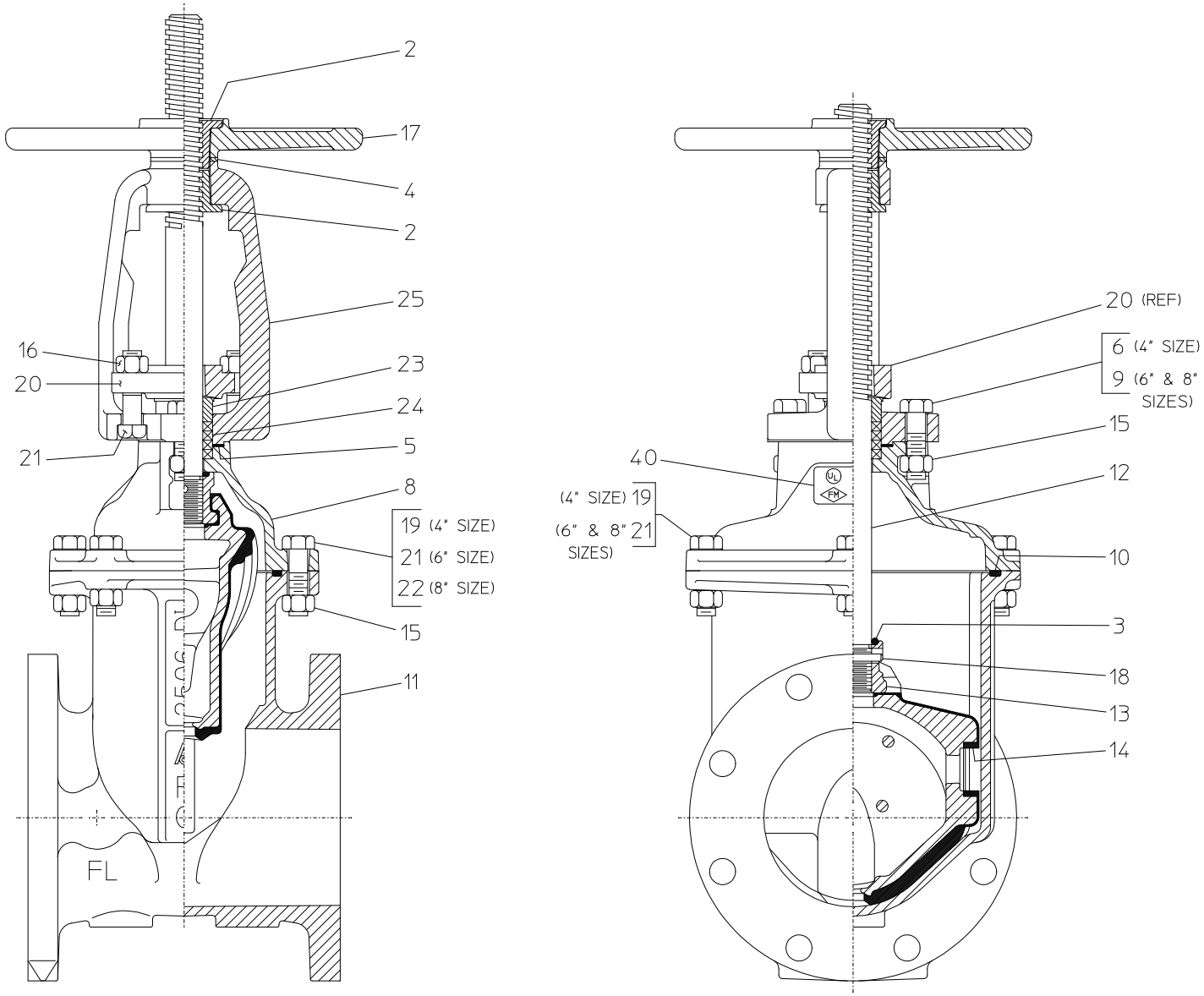
2
17
4
2
25
16
20
23
24
21
5
8
19 (4" SIZE)
21 (6" SIZE)
22 (8" SIZE)
15
11
FL
20 (REF)
6 (4" SIZE)
9 (6" & 8" SIZES)
15
40
12
(4" SIZE) 19
(6" & 8" SIZES) 21
10
3
18
13
14

IL1447

Valve Types

- Non-Rising Stem - NRS
- Outside Screw and Yoke - OS&Y
- Post Indicator Valve - PIV

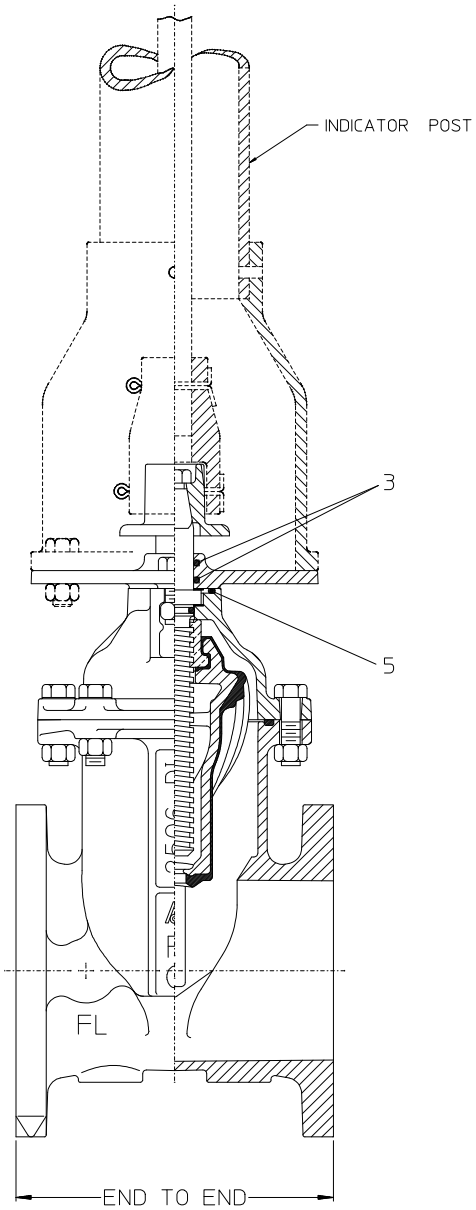
INDICATOR POST
3
5
FL
END TO END

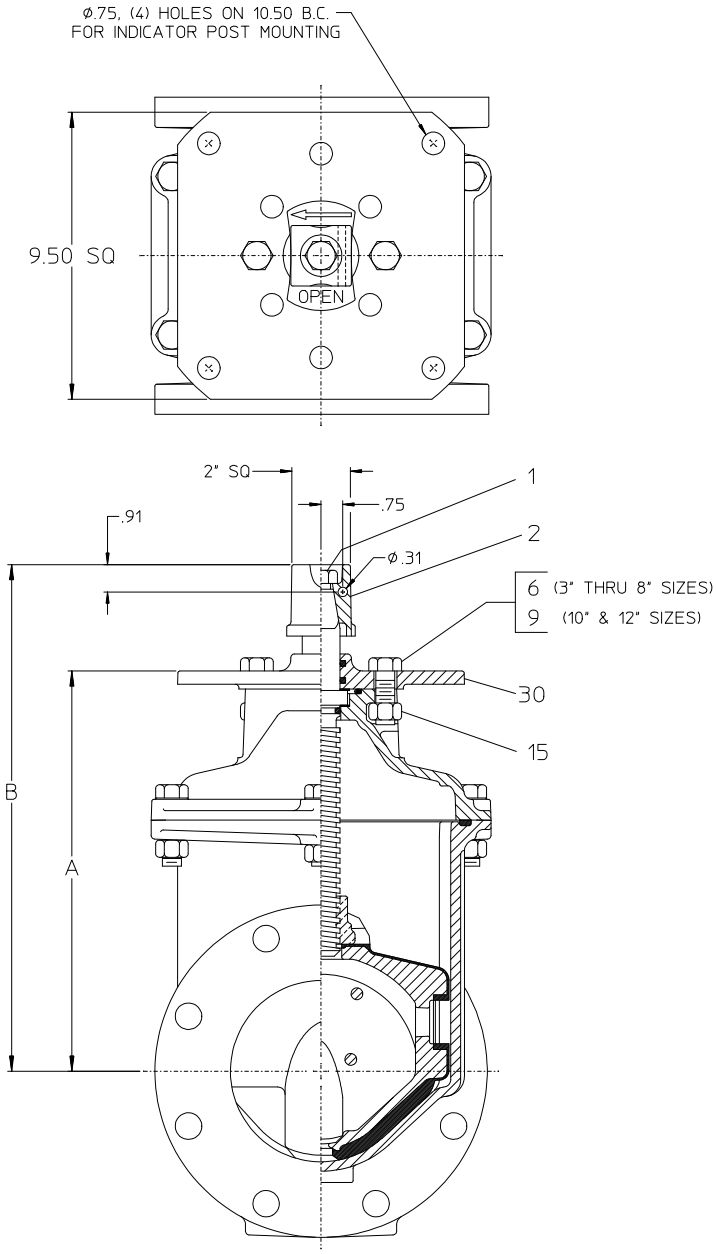
ø.75, (4) HOLES ON 10.50 B.C.
FOR INDICATOR POST MOUNTING
9.50 SQ
OPEN
2" SQ
.75
.91
ø.31
1
2
6 (3" THRU 8" SIZES)
9 (10" & 12" SIZES)
30
15
B
A

IL1476

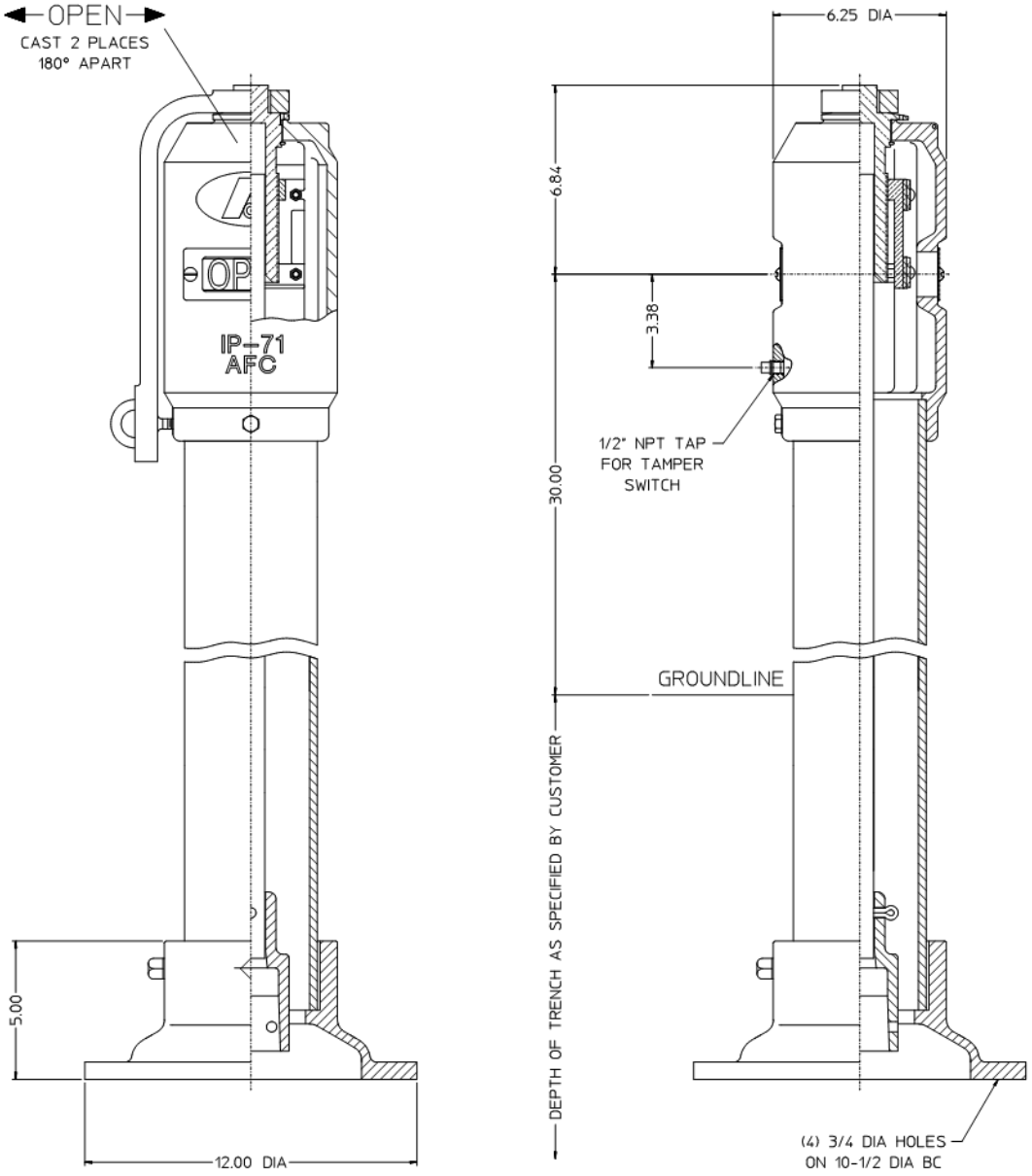
OPEN
CAST 2 PLACES
180° APART
OP
IP-71
AFC
5.00
12.00 DIA
6.25 DIA
6.84
3.38
1/2" NPT TAP
FOR TAMPER
SWITCH
30.00
GROUNDLINE
DEPTH OF TRENCH AS SPECIFIED BY CUSTOMER
(4) 3/4 DIA HOLES
ON 10-1/2 DIA BC

IL1510-1

End Connections

- Flanged
- Mechanical Joint
- Tyton
- PVC or IPS
- Threaded

125# Flanges

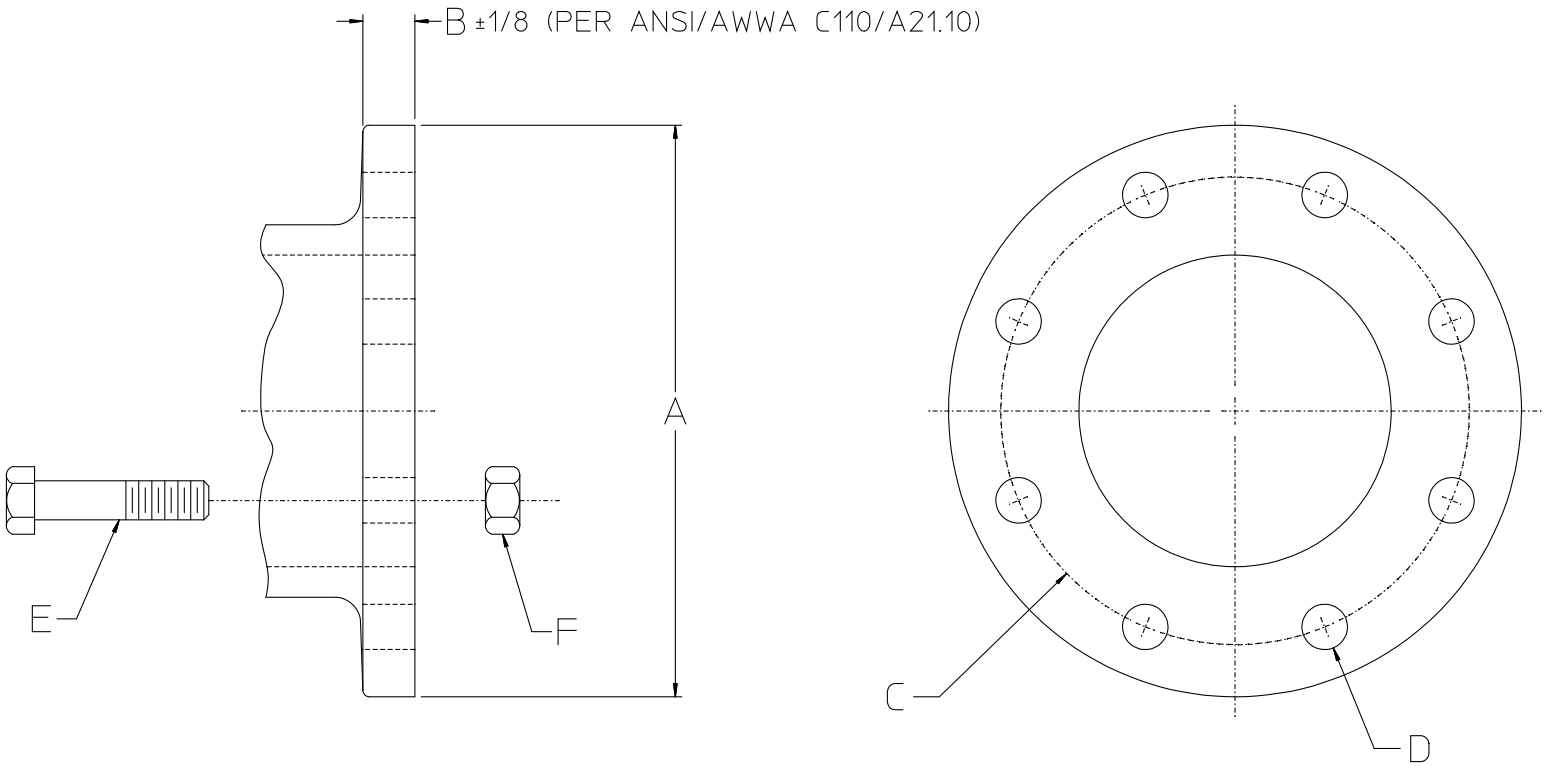

IL1451

250# Flanged

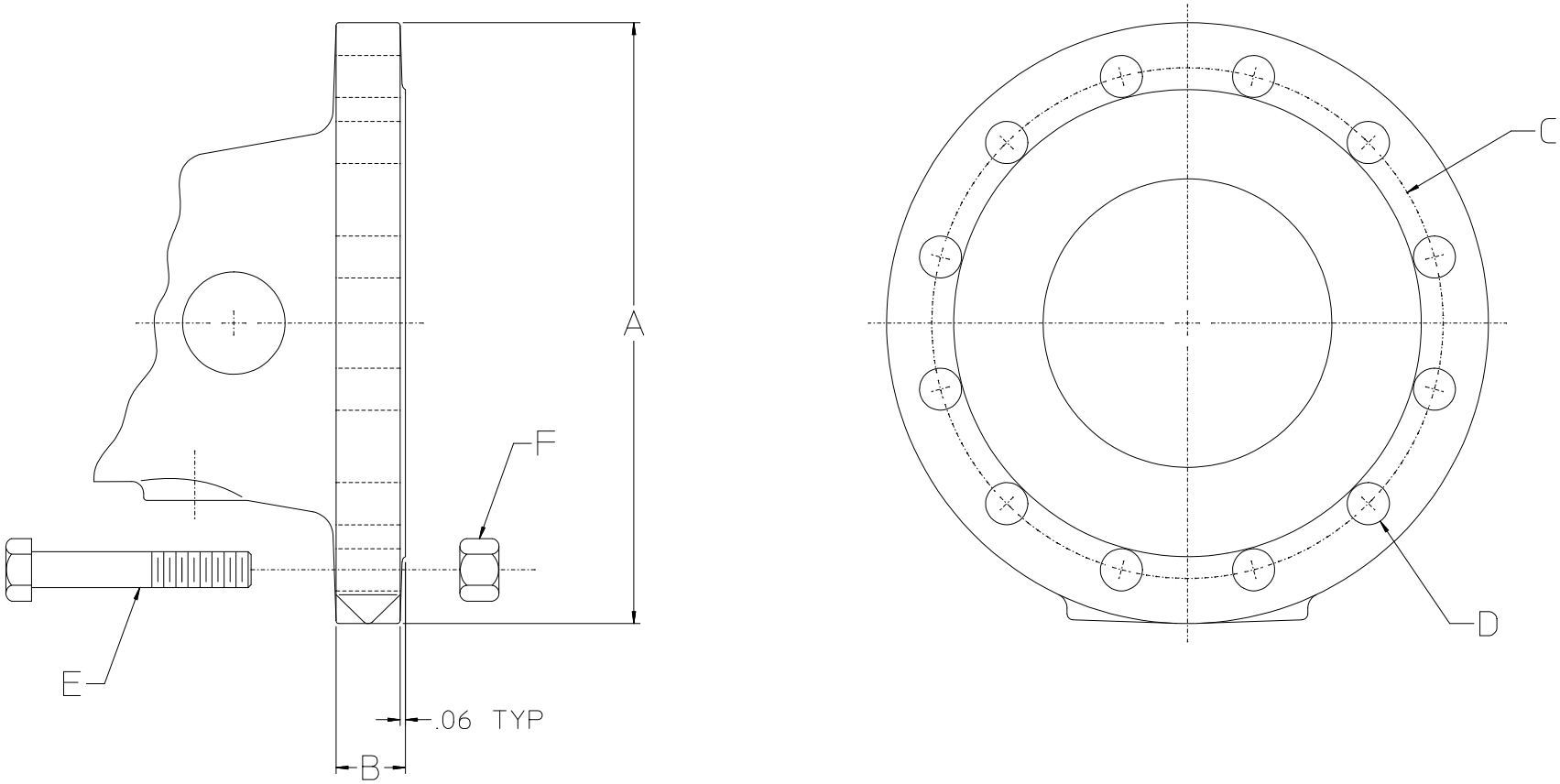

IL1489

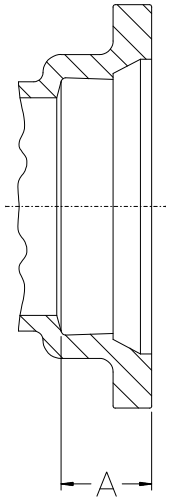

MECHANICAL JOINT (MJ)

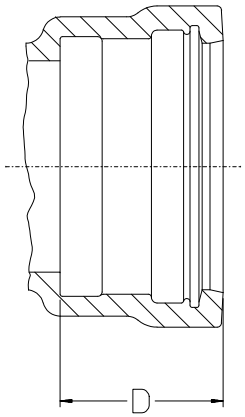

TYTON ® (TY) (4"-12" SIZES)
PUSH-ON (PO) (16" SIZE)

IL1442-2

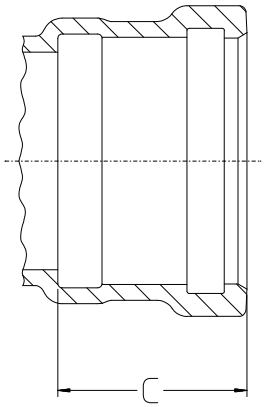

PVC

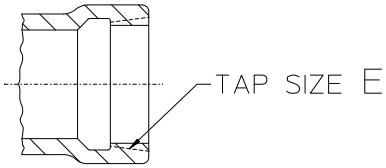

THREADED (SCREW)

IL1454-2

Tapping Valve

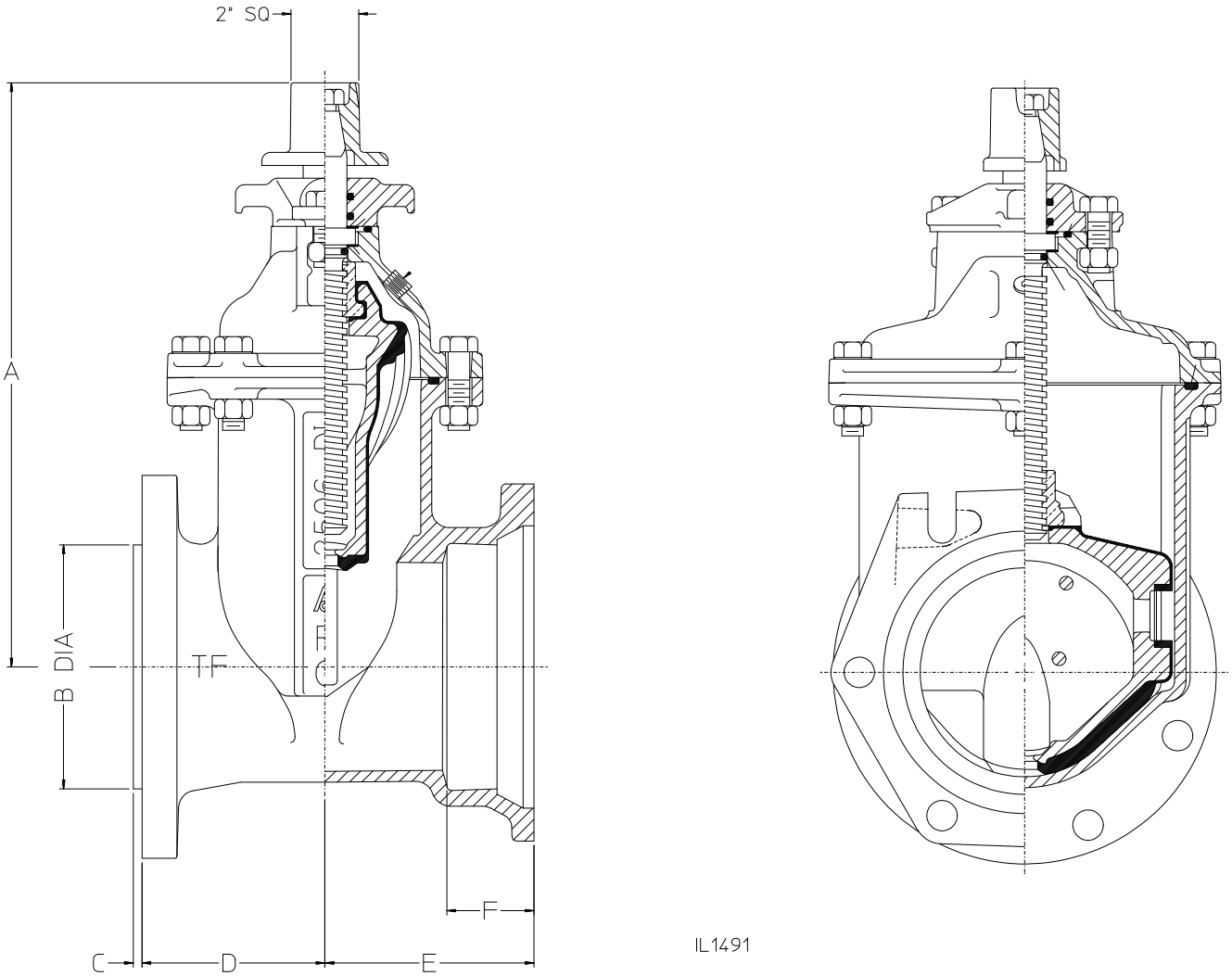

Ductile Iron vs. Gray Iron

- Mechanical Properties - Microstructure
- Mechanical Tests
- Pressure Testing
- Beam Loads

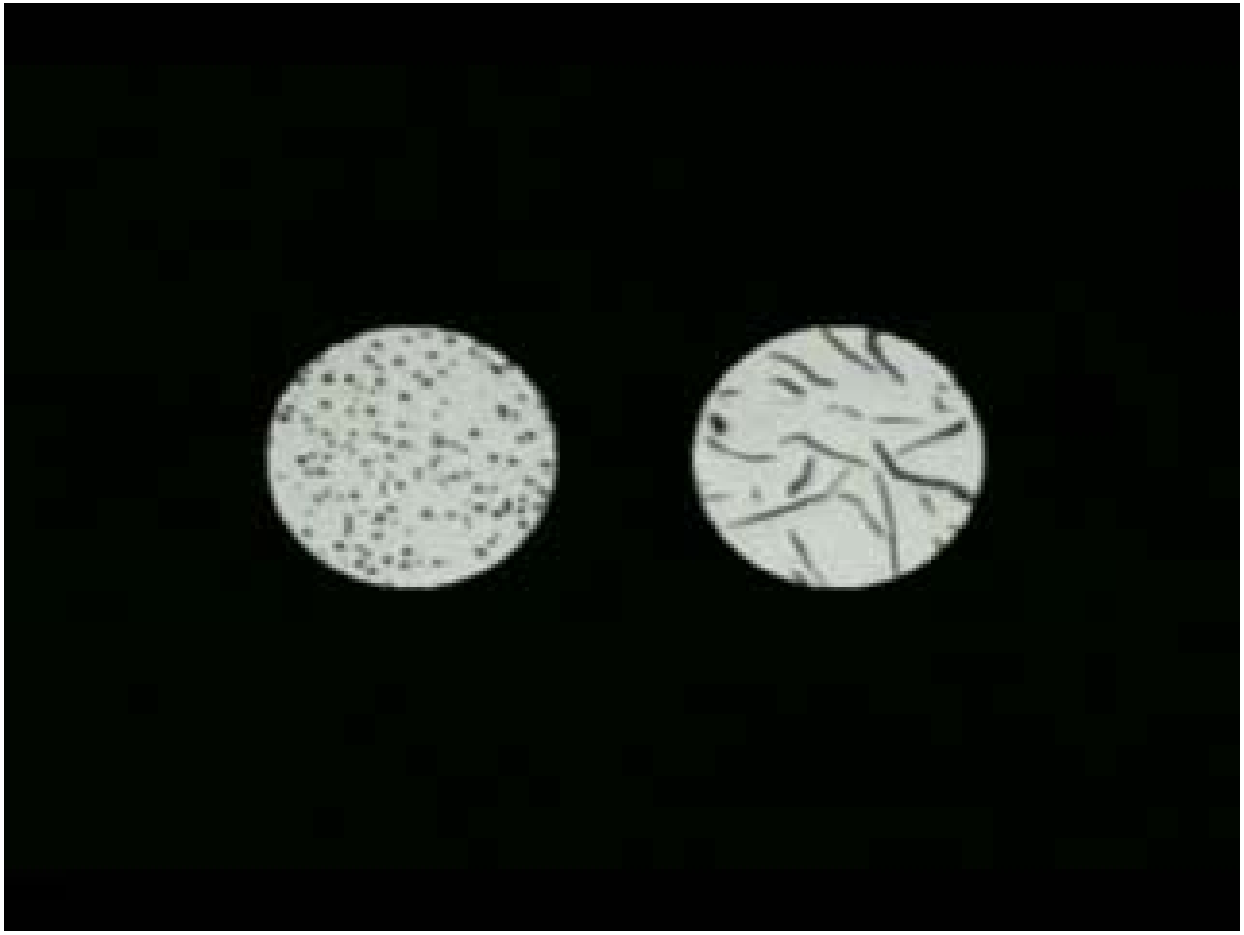

Ductile Iron vs. Gray Iron

- Mechanical Properties - Microstructure
- Mechanical Tests
- Pressure Testing
- Beam Loads

Ductile Iron vs. Gray Iron

- Mechanical Properties - Microstructure
- Mechanical Tests
- Pressure Testing
- Beam Loads

Series 500
Series 2500
Gray Iron
Ductile Iron
Resilient Wedge Valve

Ductile Iron vs. Gray Iron

- Mechanical Properties - Microstructure
- Mechanical Tests
- Pressure Testing
- Beam Loads

Series 2500
Resilient Wedge Gate Valve

Resilient Seated Features

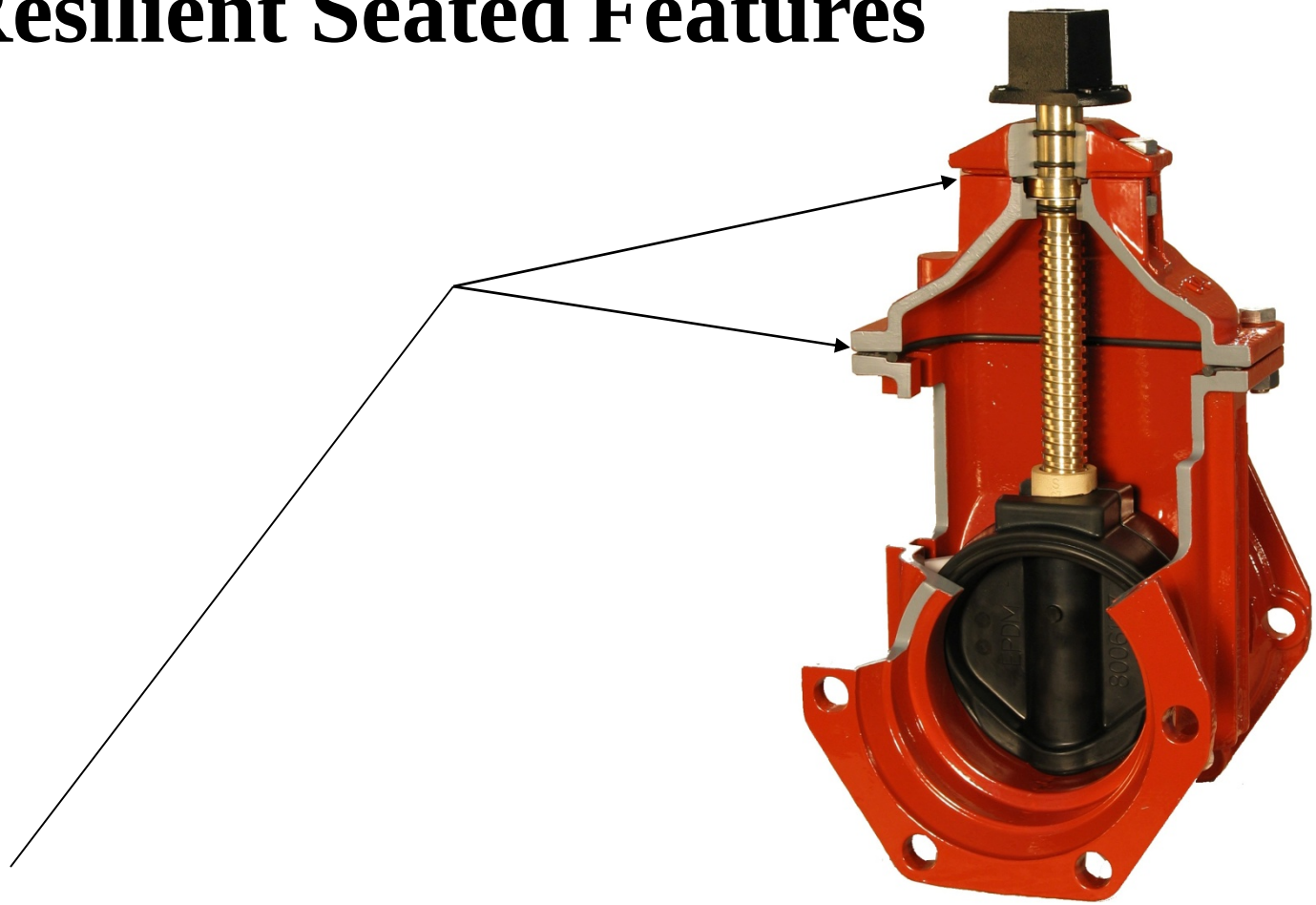

1. **Pressure Energized Seals**

Resilient Seated Features

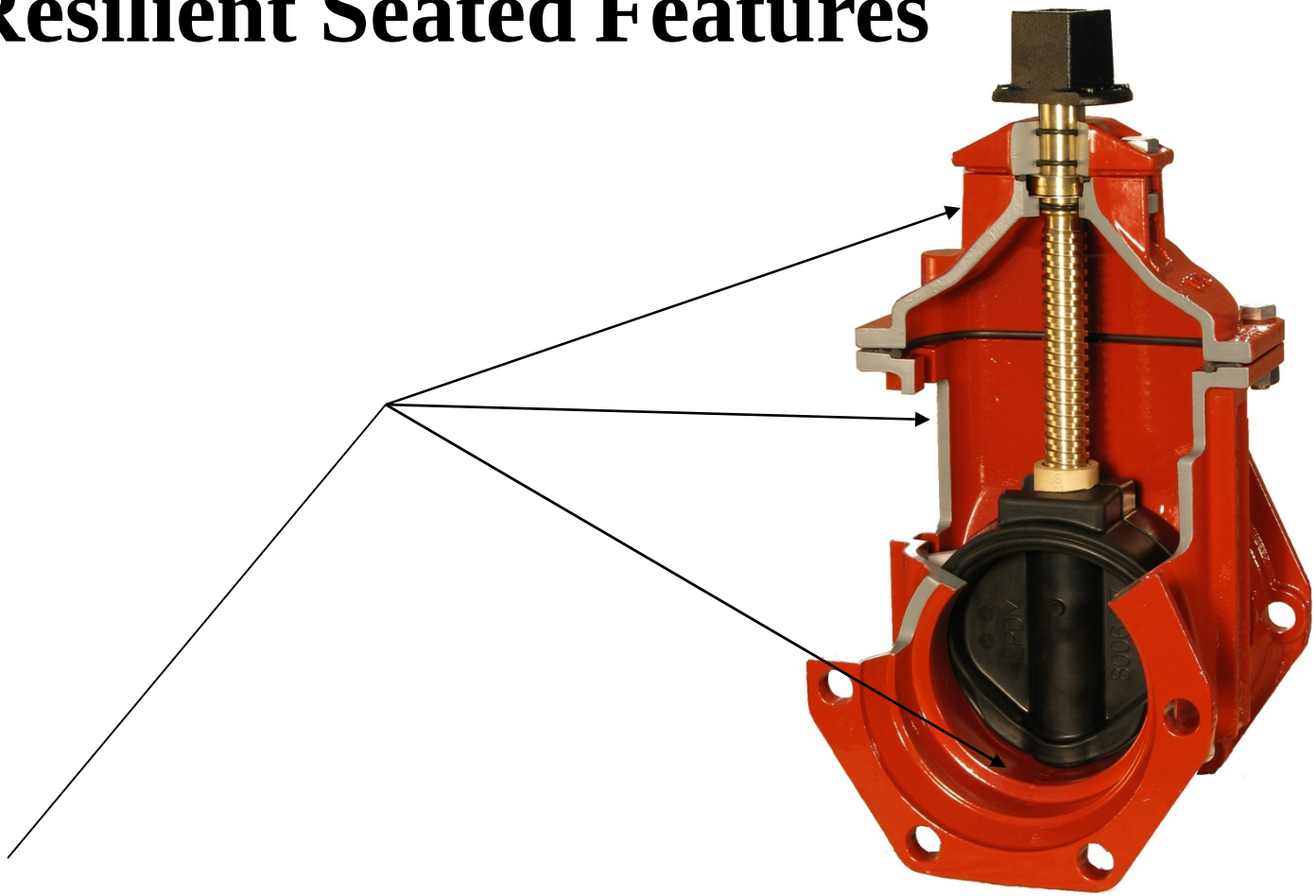

2. Fusion Bonded Epoxy coating

'03 7 22

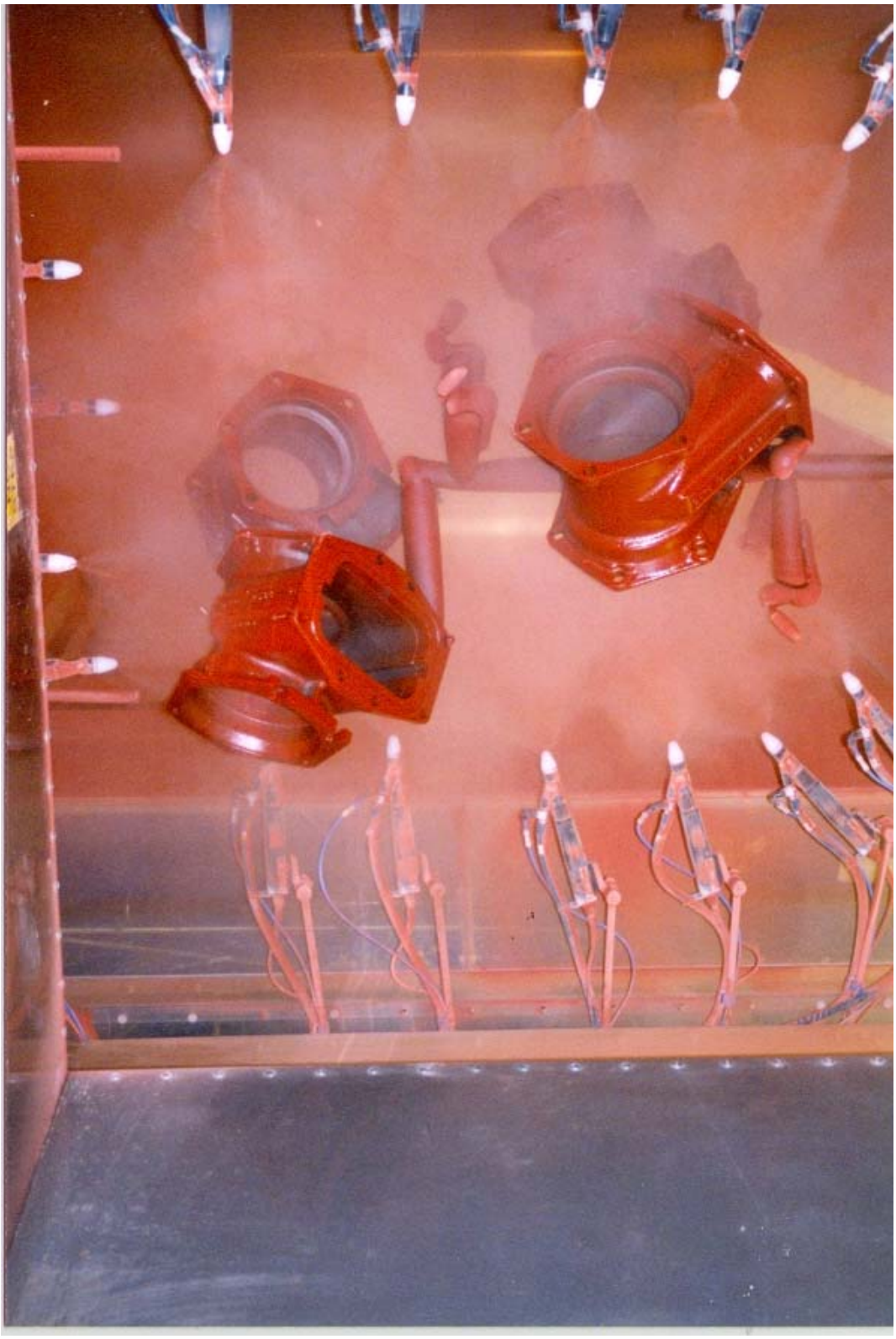

PACE

Resilient Seated Features

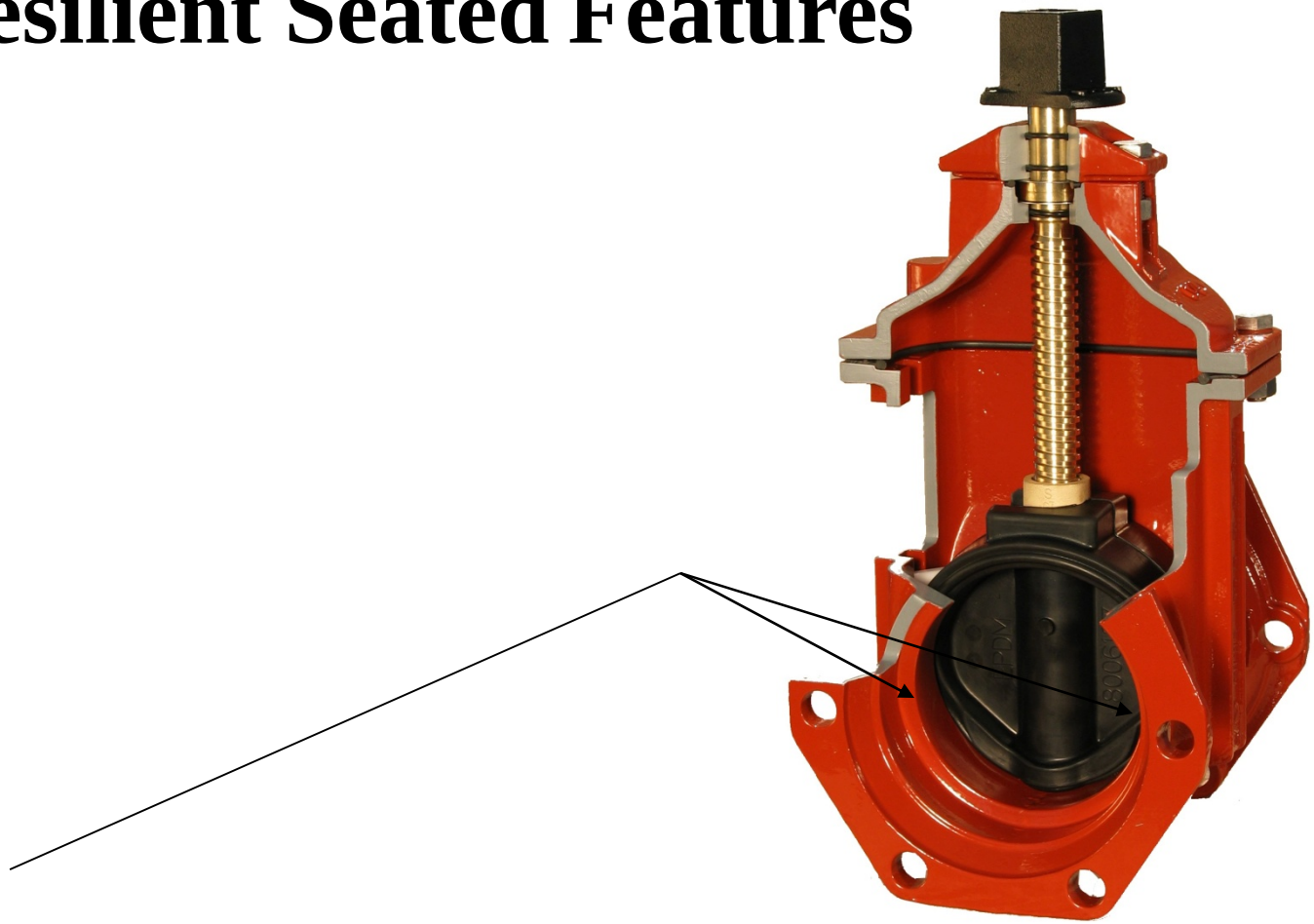

3. Oversized diameter waterway

Resilient Seated Features

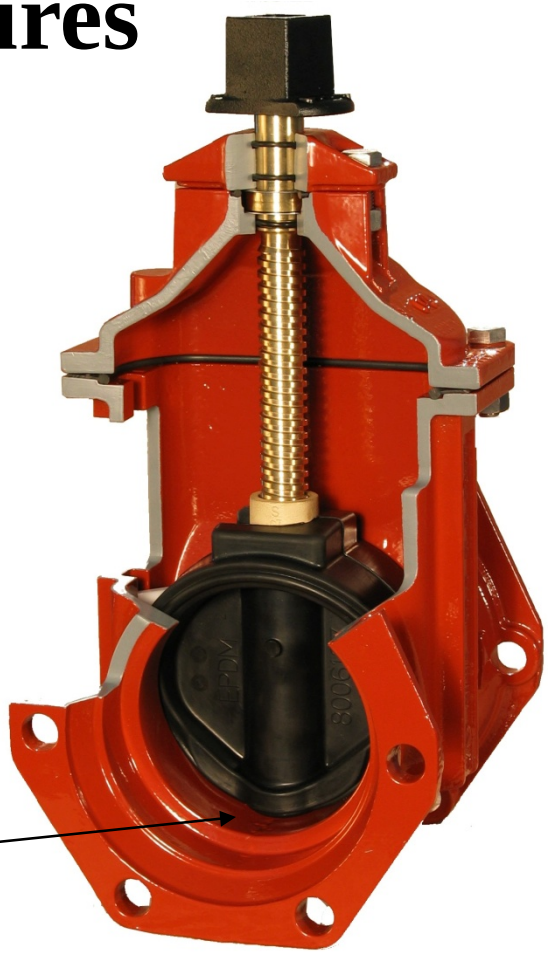

4. Smooth waterway

Resilient Seated Features

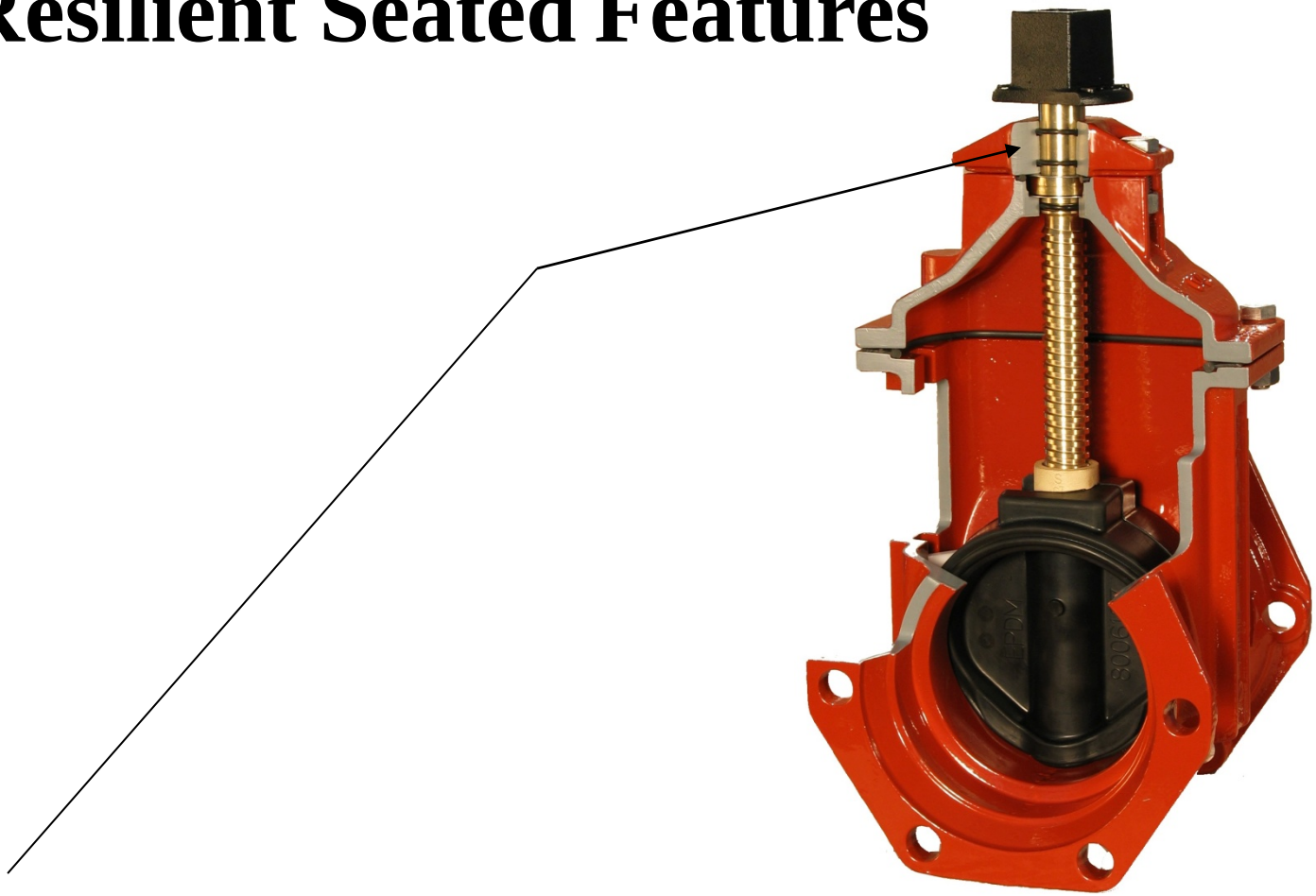

5. Two upper o-ring seals

Resilient Seated Features

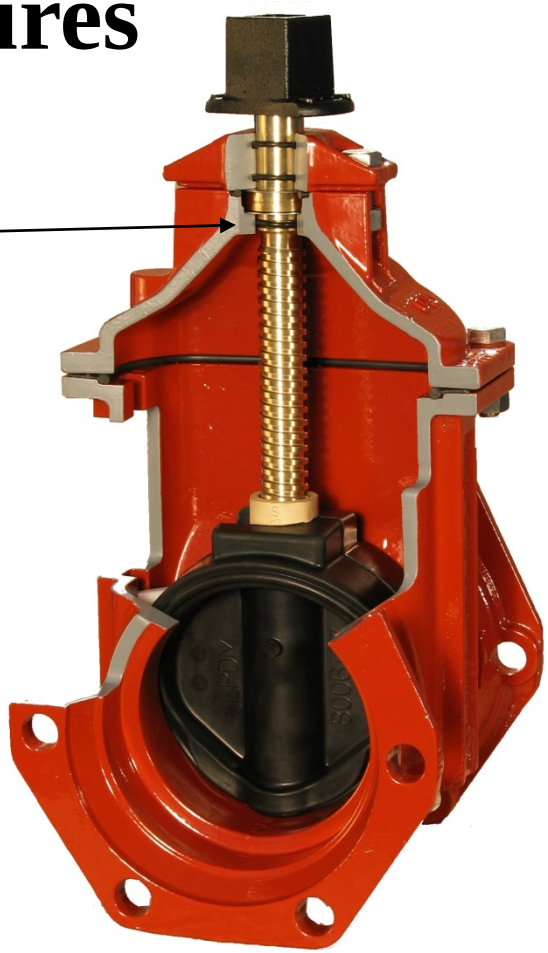

6. Lower o-ring seal

Resilient Seated Features

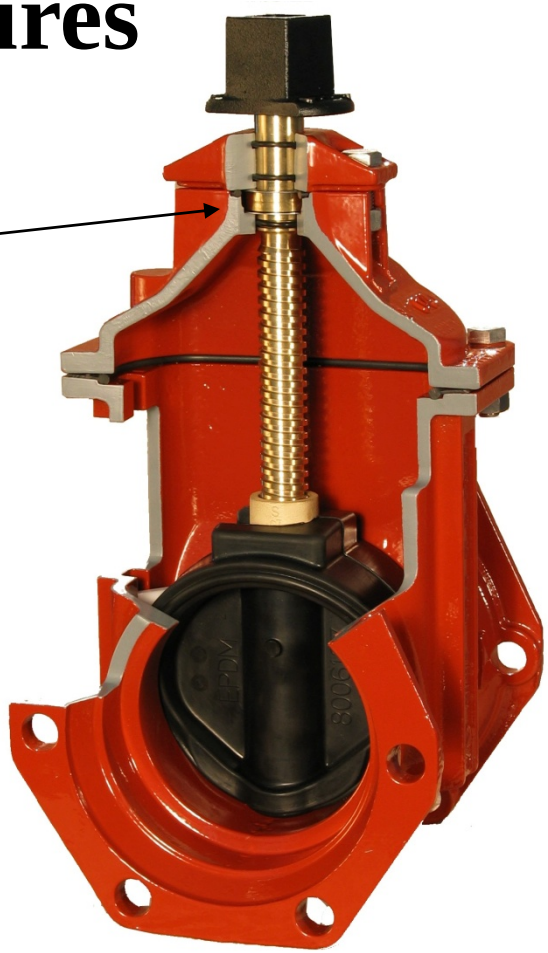

7. Two thrust washers

Resilient Seated Features

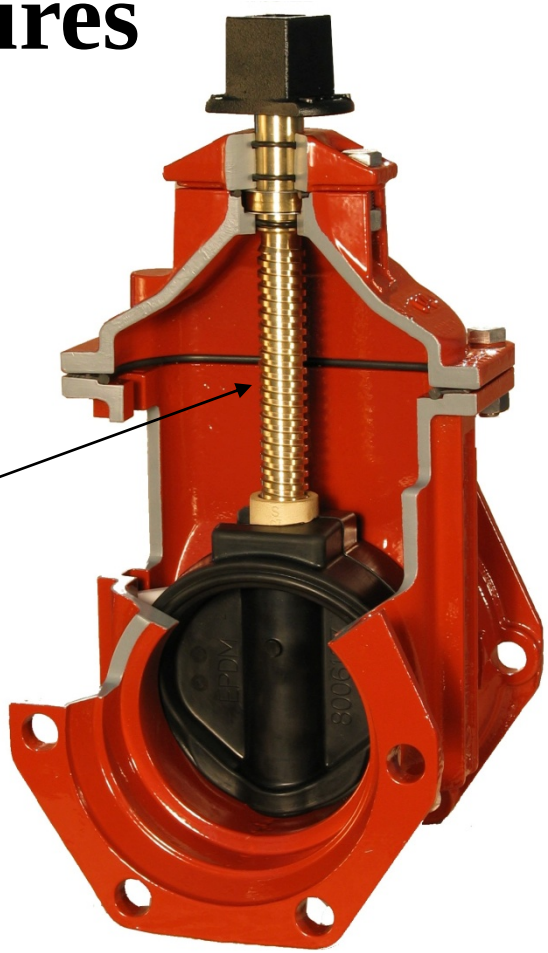

8. High strength bronze stem

Resilient Seated Features

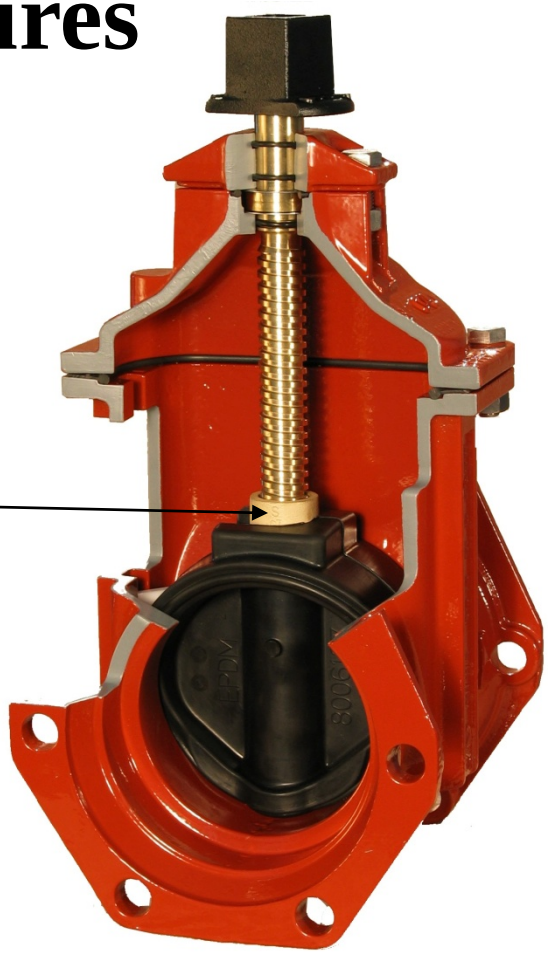

9. Independent bronze stem nut

Resilient Seated Features

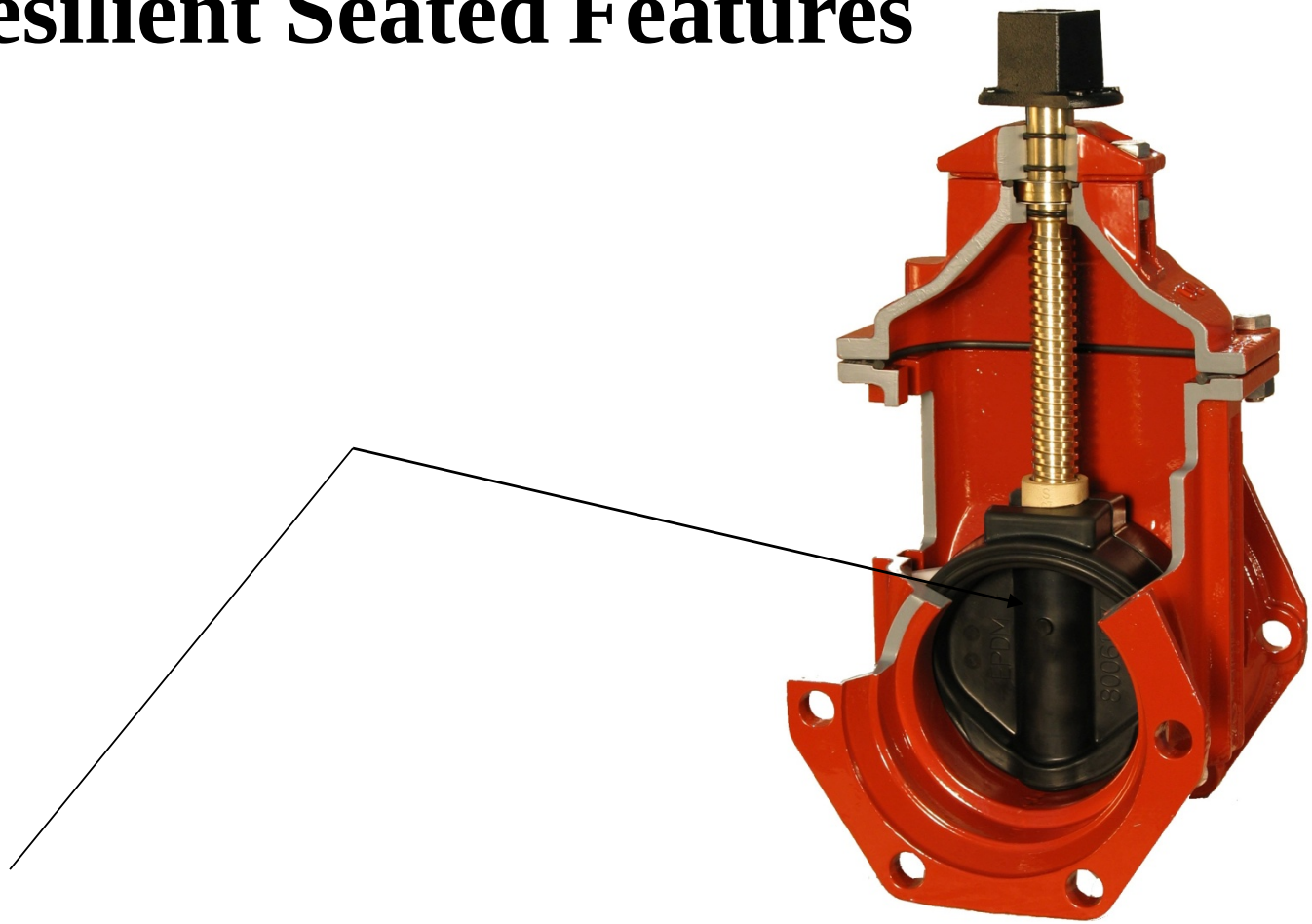

10. Rubber encapsulated wedge-EPDM

'03 22