Parametrix

Remote SCADA Management of Water Systems

Howard Woodward P.E.
Senior Process Controls Engineer

Glen Barcus
Senior SCADA System Designer

Parametrix

Introduction

Tools and options to improve remote management of water utility systems

- System architecture
- Configuration improvements
- Live demonstration

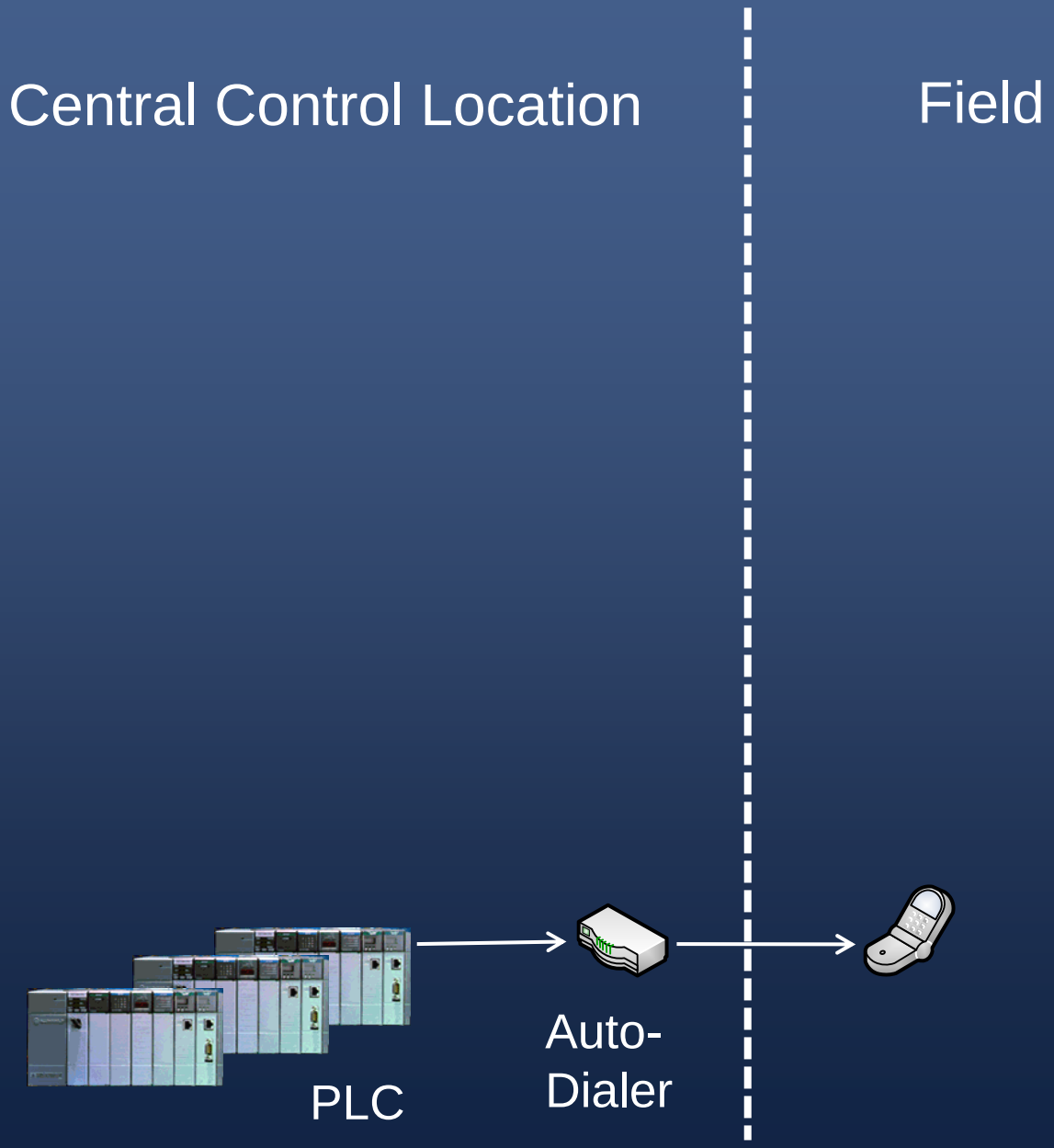

Parametrix

Auto-Dialers

- No additional hardware or software
- Quantity of alarms limited by hardware
- Initial Setup can be difficult
- Dial-out only (no dial-in)
- Cost per alarm point is high
- No additional process data
- No call-out list management
- Less popular for new installations

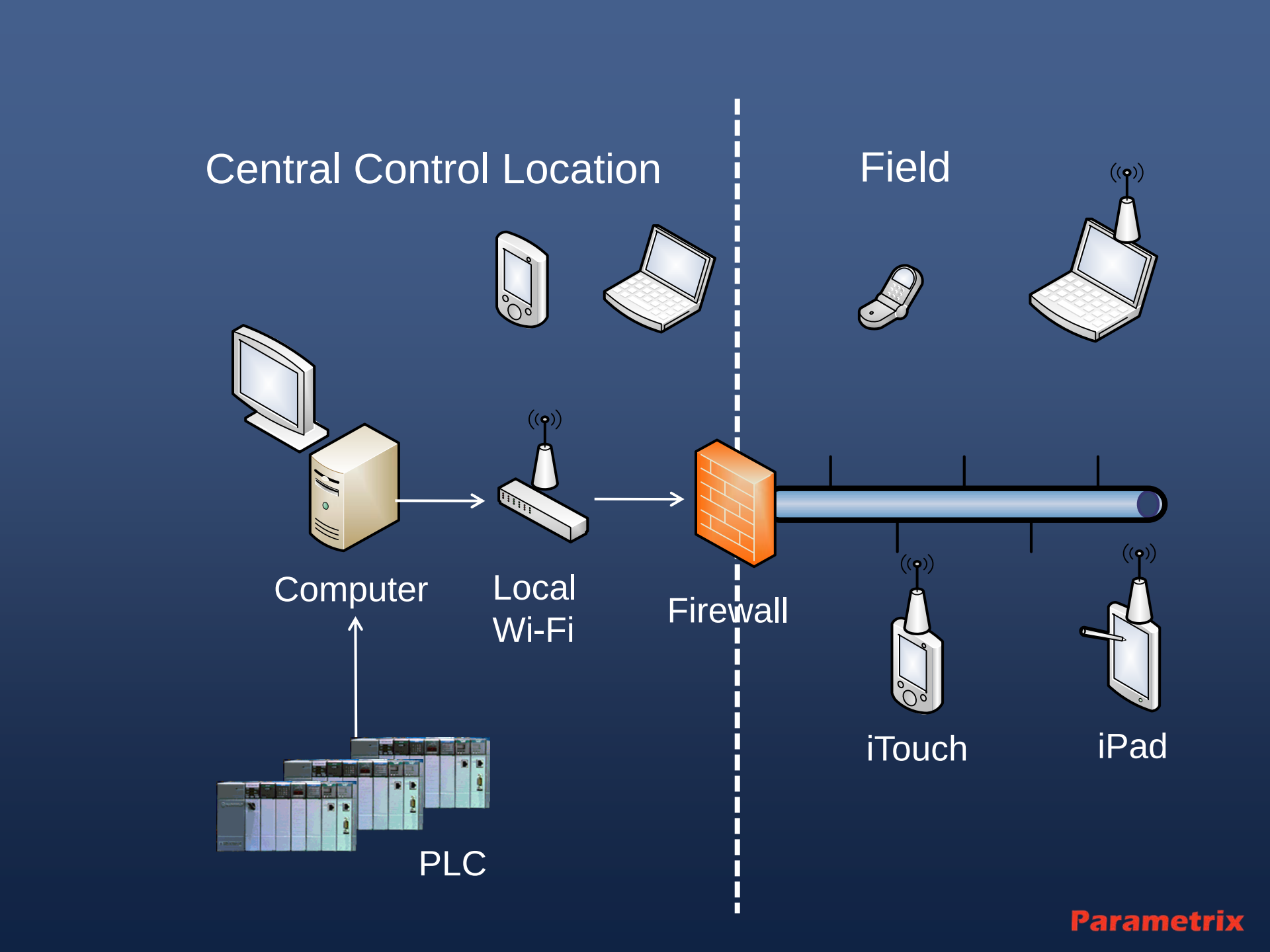
Central Control Location
Field
Computer
Local
Wi-Fi
Firewall
iTouch
iPad
PLC
Parametrix

Main Computer

- Standard desktop PC
- Can be a server for larger systems
- Contains
  - Visualization software
  - Alarm software
  - Historian & information display software
  - Remote reading software

Firewall Essentials

- Highly secure, high quality firewall is key
- Coordination with remote devices increases security
- Limits outgoing internet access
- Consider Internet connection that is separate from business LAN/IT system
- Multiple simultaneous user access is important

Rugged Laptop

- Hardware designed for extreme environments
  - Daylight screen
  - Metal case
  - Waterproof keyboard
  - High vibration and drop/shock resistance
- Used by police departments and military

Rugged Laptop

- Higher cost – higher durability
- Internet access
  - Cellular phone network
  - WiMax (Clearwire) Internet access
  - Wifi (stationary)
- Terminal Services or Web Browser remote access reduces maintenance effort

Handheld Devices

- Ultimate in mobile monitoring: in meetings or on the go
- Alarms delivery: text messages or email

Parametrix

Handheld Devices

- Full access through browser or application
  - iTouch (Wifi only)
  - iPhone/iPad (multitasking support scheduled for 2010)
  - Windows Mobile cellular phones

Configuration Option Improvements

- Advanced Alarm Management
- Screen and Trend Organization

Advanced Alarm Management

- Direct focus to most urgent issue
- Reduce distraction and stress during emergencies
- Provide advisory if overall situation is degrading
- Reduce overtime effort and stress for operators

Advanced Alarms

- Management of alarms across multiple sites
- Related alarms grouped and consolidated for notification as a unit
- Automatic suppression for sites that are out-of-service
- Alarm delivery schedules and multiple responders
- Alarm prioritization

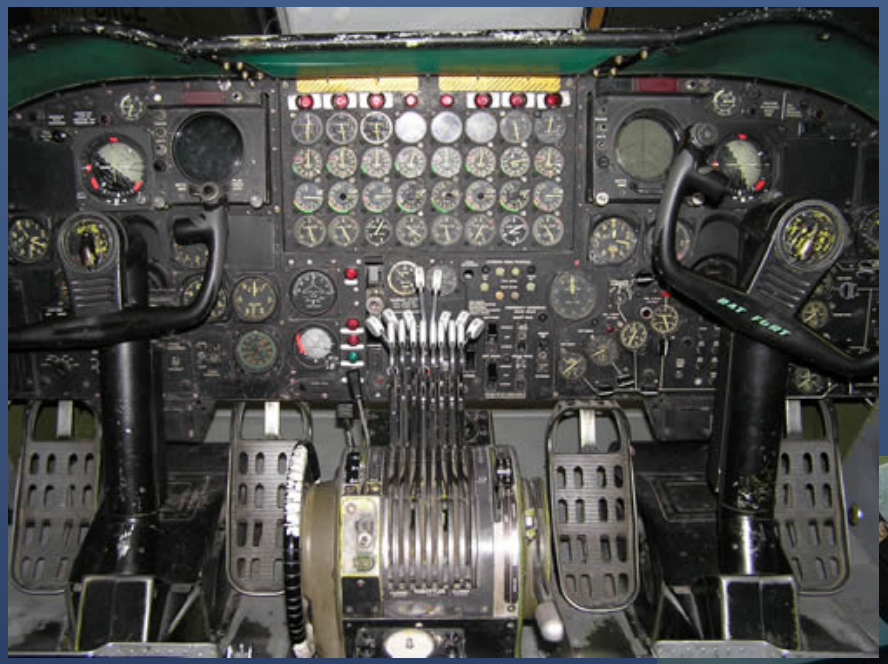

Alarm Prioritization

- High priority: immediate on-site response required, alarm selects responder
- Remote response: operational changes, no site visit required
- Low priority: response can be delayed until normal business hours
- Events: tracked and time-stamped, but no operator alert

Alarm Improvement Examples

- Standby generator running
  - Classify as event rather than an alarm
  - Additional ATS contact and PLC input required to indicate running in normal mode
- Alarms associated with a specific pump or process train can be suppressed if stopped normally
- VFD failure alarm delivered to operator and electrician

Increased Installation Effort

- Operations: Development of detailed alarm and operations strategies
- Programming: Additional effort to configure alarms
- Equipment: Collect more information from equipment

Make Information Accessible

- Easy-to-read overview of your system with links to increasing detail
- Summary trend screens that indicate when further detailed analysis is helpful
- Overview alarm screens display alarms in priority order with selectable filters

Minimum Requirements

- Programmable Logic Controller (PLC) – usually part of water system automation
- Computer with software for visualization, historical data, and alarm management
- Reports
- Troubleshooting cases

Additional of Benefits

- Systems with Remote access allow trusted outside support to “look over the shoulder” when assistance is needed
- Allows outside support and troubleshooting of PLC programs remotely

Live Demonstration

- The following slides are examples from the Live Demonstration

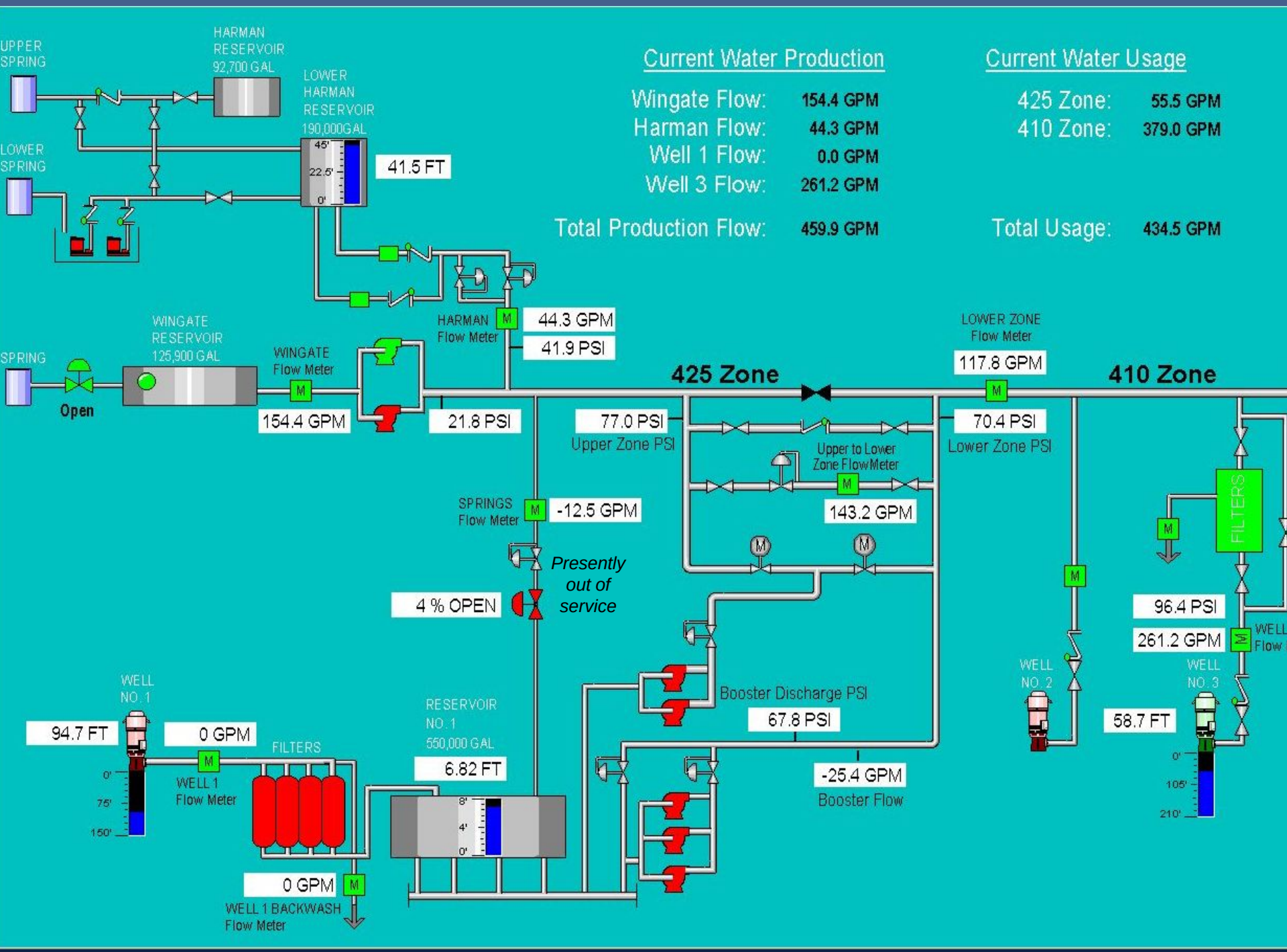
Current Water Production
Wingate Flow: 154.4 GPM
Harman Flow: 44.3 GPM
Well 1 Flow: 0.0 GPM
Well 3 Flow: 261.2 GPM
Total Production Flow: 459.9 GPM
Current Water Usage
425 Zone: 55.5 GPM
410 Zone: 379.0 GPM
Total Usage: 434.5 GPM
UPPER SPRING
LOWER SPRING
HARMAN RESERVOIR 92,700 GAL
LOWER HARMAN RESERVOIR 190,000GAL
45'
22.5'
0'
41.5 FT
HARMAN Flow Meter
44.3 GPM
41.9 PSI
SPRING
Open
WINGATE RESERVOIR 125,900 GAL
WINGATE Flow Meter
154.4 GPM
21.8 PSI
425 Zone
77.0 PSI
Upper Zone PSI
LOWER ZONE Flow Meter
117.8 GPM
410 Zone
70.4 PSI
Lower Zone PSI
Upper to Lower Zone FlowMeter
143.2 GPM
SPRINGS Flow Meter
-12.5 GPM
Presently out of service
4 % OPEN
FILTERS
96.4 PSI
261.2 GPM
WELL Flow
WELL NO. 2
WELL NO. 3
58.7 FT
0'
105'
210'
Booster Discharge PSI
67.8 PSI
-25.4 GPM
Booster Flow
WELL NO. 1
94.7 FT
0 GPM
WELL 1 Flow Meter
FILTERS
RESERVOIR NO. 1 550,000 GAL
6.82 FT
8'
4'
0'
0 GPM
WELL 1 BACKWASH Flow Meter

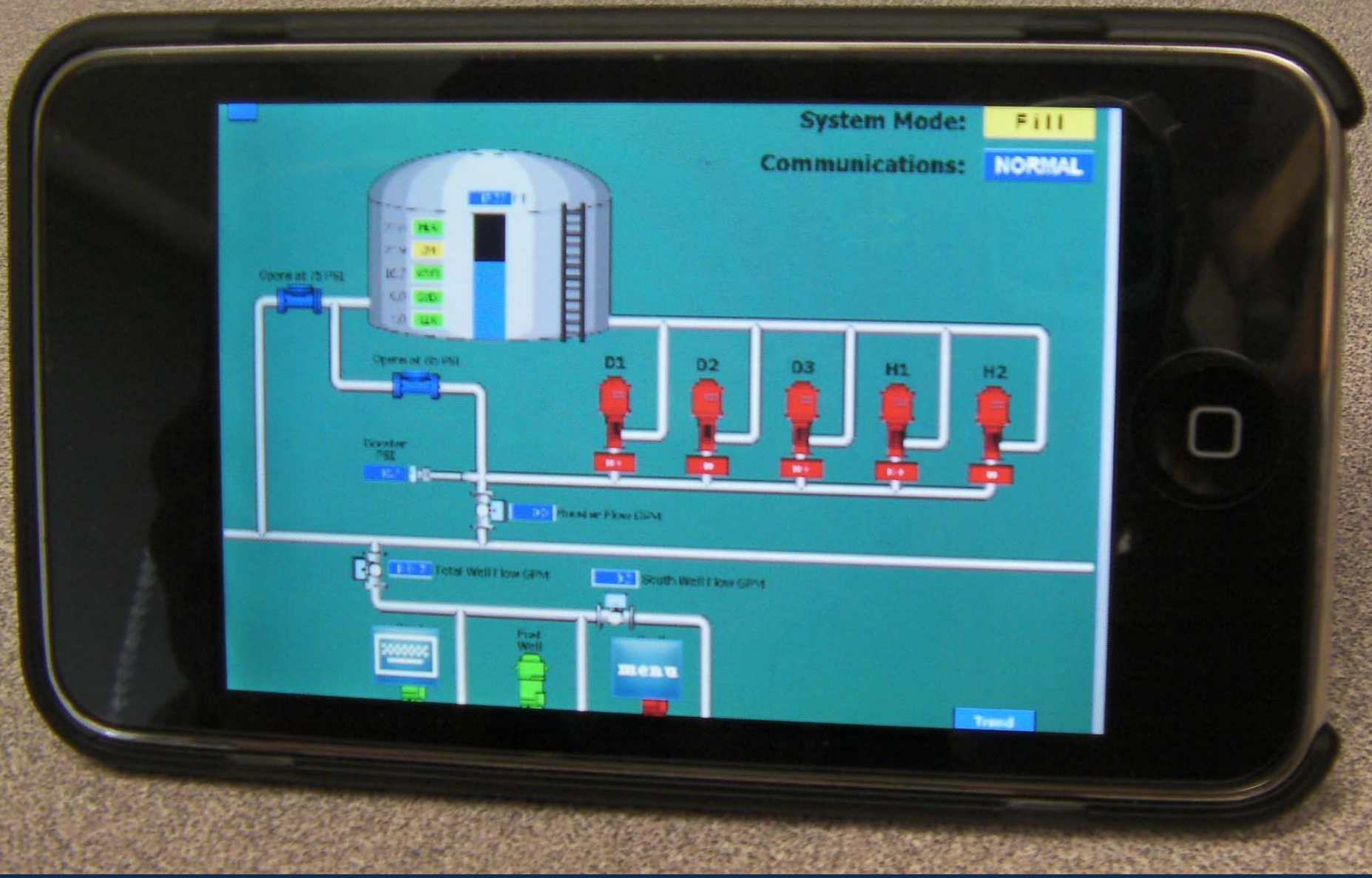
System Mode:
Fill
Communications:
NORMAL
D1
D2
D3
H1
H2
Total Well Flow GPM
South Well Flow GPM
Menu
Trend

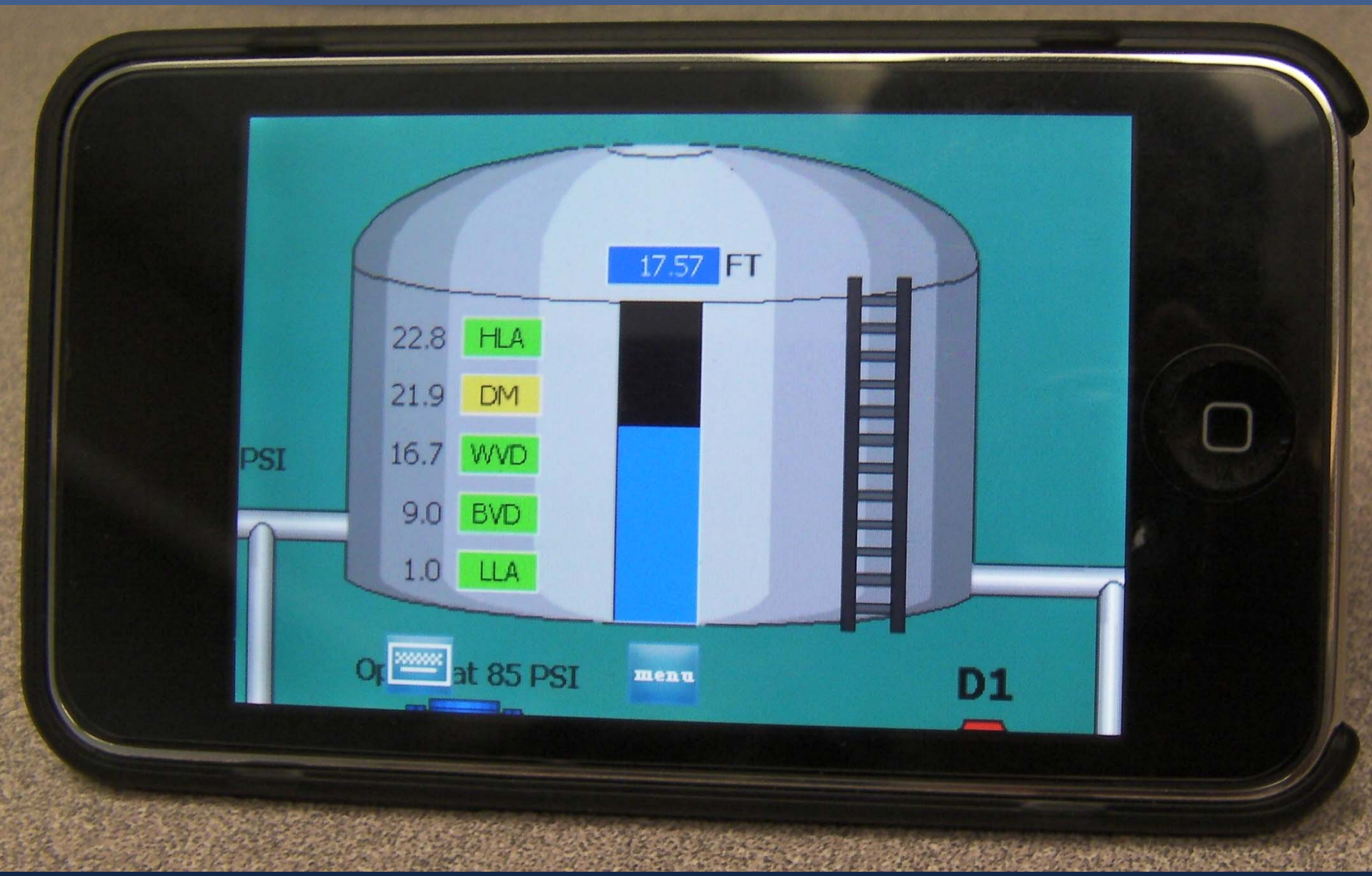
17.57 FT
22.8 HLA
21.9 DM
16.7 WVD
9.0 BVD
1.0 LLA
PSI
at 85 PSI
menu
D1

May 09
01:00:46
May 09
13:00:46
May 10
01:00:46
May 10
13:00:46
May 11
01:00:46
01:00:46
menu
01:00:46

Summary

- Select a system architecture to provide a path toward advanced features
- Advanced alarm management improves water system operations
- Organize information to streamline access to important data
- Remote access improves SCADA support and maintenance

Questions?

- Howard Woodward P.E.
  hwoodward@parametrix.com

- Glen Barcus
  gbarcus@parametrix.com

- Darold Woodward
  darold@parametrix.com