TRIPAC

SPECIALIZING IN WATER, WASTE WATER AND CONSTRUCTION INDUSTRIES

Waterworks Fasteners

TRIPAC

THIS IS A SCREW

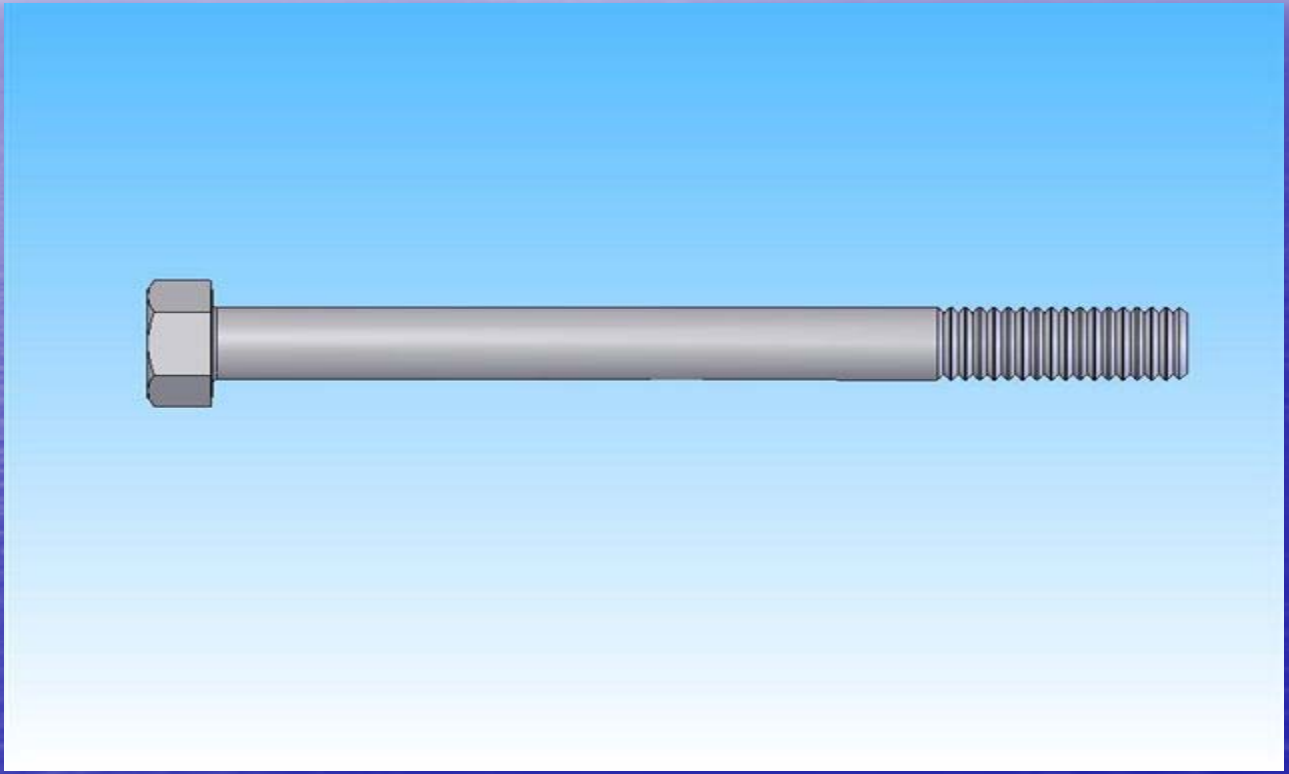

TRIPAC

THROUGH BOLT & CAPSCREW

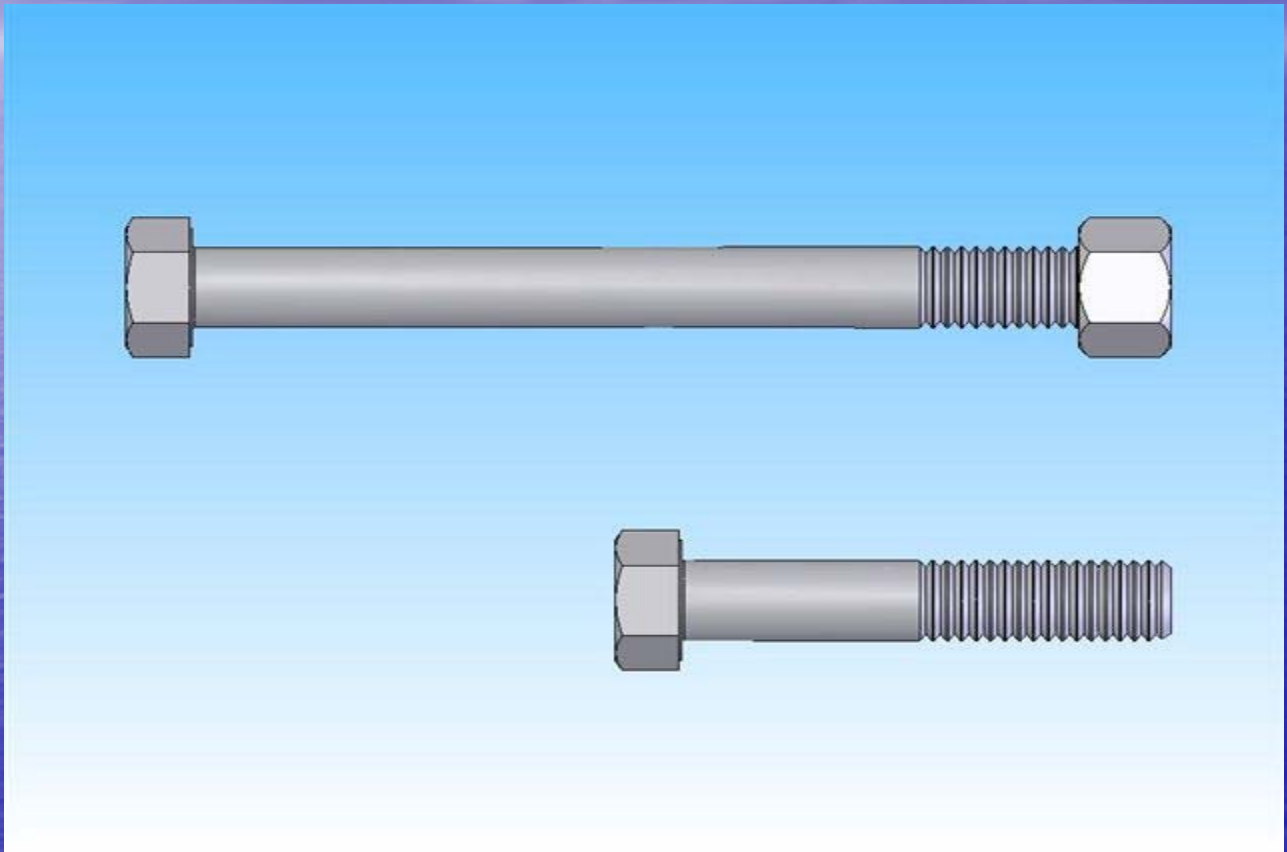

TRIPAC

Bolt Terms

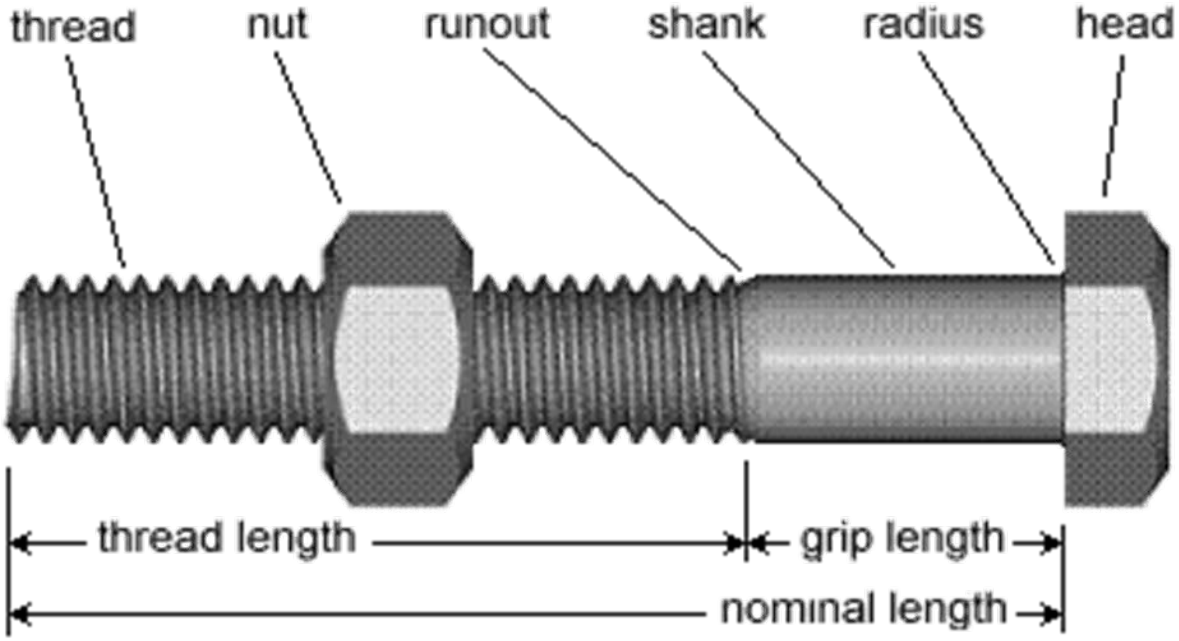
thread
nut
runout
shank
radius
head
thread length
grip length
nominal length

A Bolt is a Spring!

TRIPAC

Thread Loading

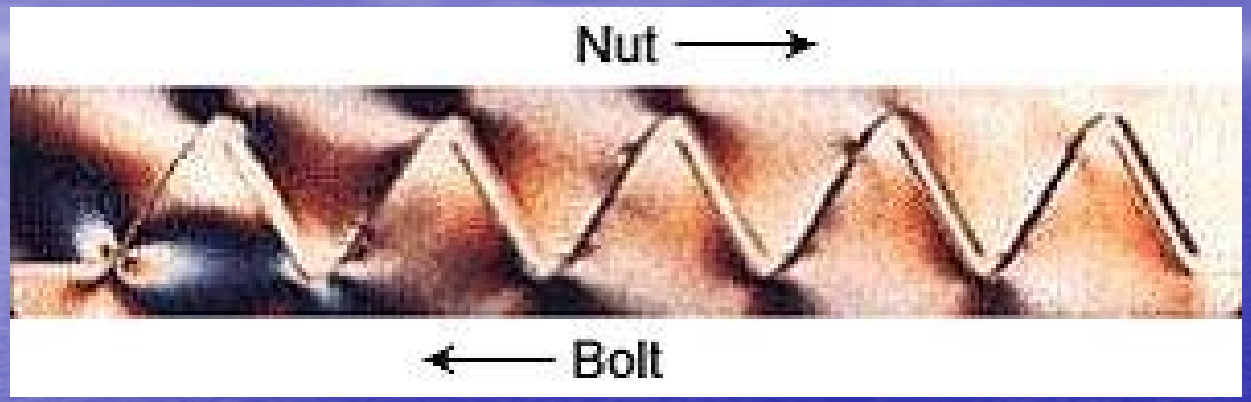

Thread	Load	Sum
1	34%	34%
2	23%	55%
3	16%	71%
4	11%	82%
5	9%	91%
6	7%	98%

TRIPAC

Grade 2

- **ASTM 307A – Finished**
  - Mild Steel
  - Minimum Tensile
  - No Max Tensile

- **ASTM 307B - Heavy**
  - AWWA General Specification
  - 1/8 larger across the flats
  - Requires 1 wrench size larger
  - 100ksi Max Tensile

Grade 5

- SAE J429 - Finished
- Structural Grade Bolt

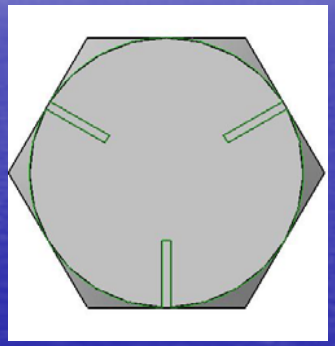

- ASTM A325 - Heavy
  - Buildings
  - Less Threads
  - Longer Shank

A325 SHORT THREADS / GR 5 LONG THREADS

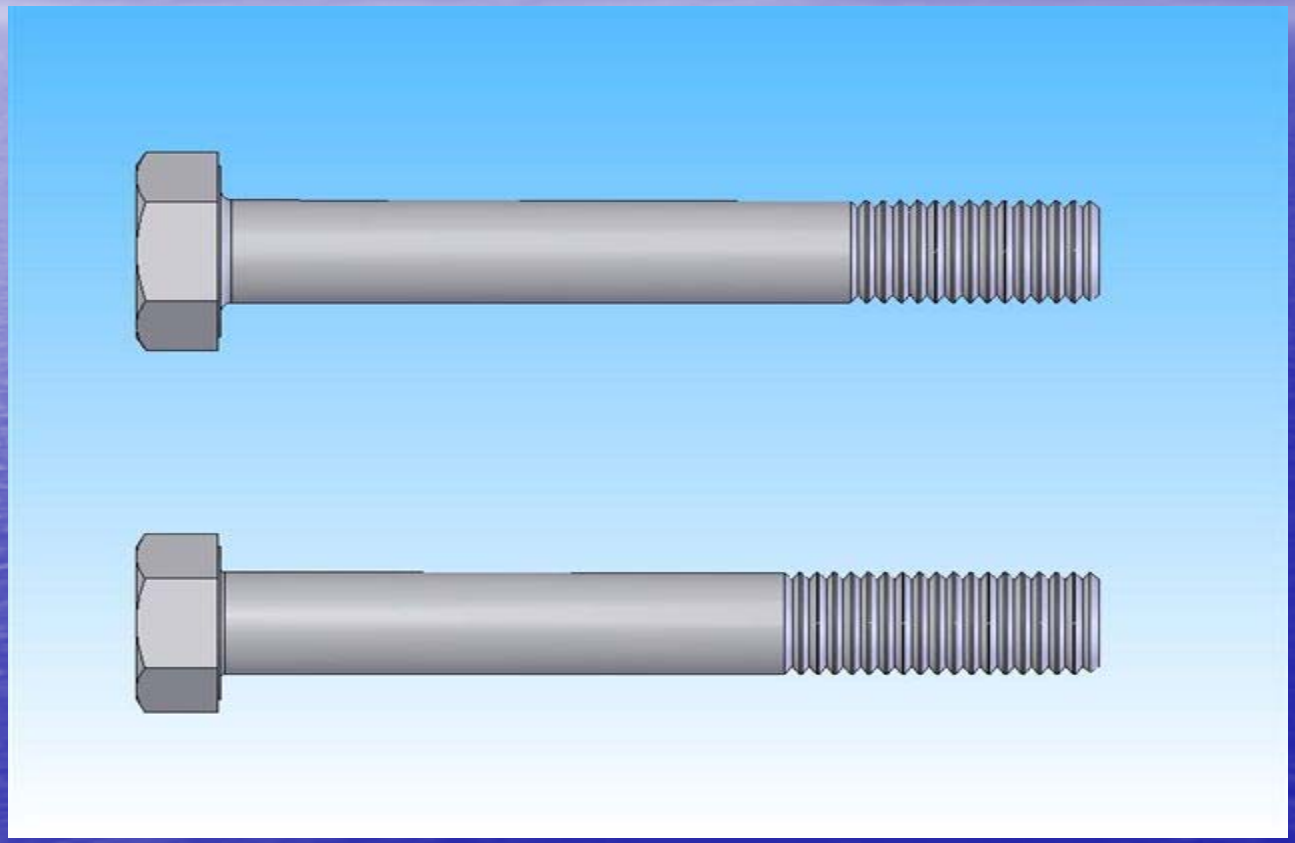

TRIPAC

Grade 8 / A354 BD

- Automotive
- Off Road / Suspension
- Large Diameter Connections
- 72” & Above

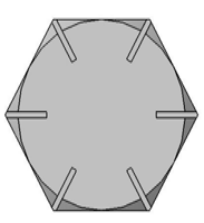

TRIPAC

Break-away Bolts

- Wet or Dry?
- LADWP 100% Silicon Filled
- Proper orientation
- 6 hole - 5/8”
- 8 hole - 3/4”
- Bolt up or down?

Red Brass (silicon bronze)

- For meters - no galvanic corrosion
- Soft
- Fully Threaded
- Alternate is SS w/ blue nut

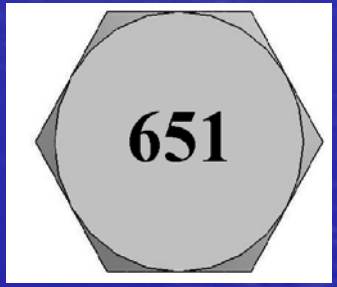

TRIPAC

T-304 Stainless Steel

- ASTM F593 / F594 – Finished Hex
  - T-304
  - No Molybdenum

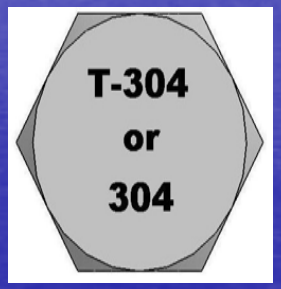

- ASTM A193 / A194 – Heavy Hex
  - B8 – Heavy hex version of 304

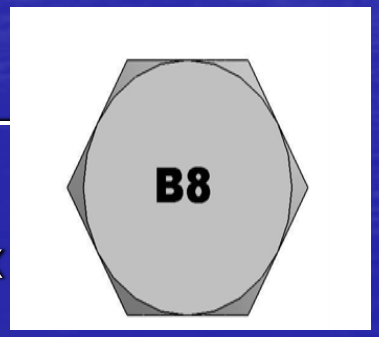

TRIPAC

T-316 Stainless Steel

- ASTM F593 / F594 – Finished Hex
  - T-316
  - More MD & NI - Higher yield

- ASTM A193 / A194 – Heavy Hex
  - B8M – Heavy hex version of 316

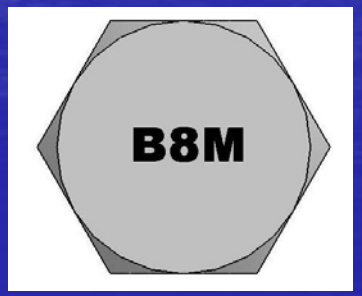

304 STAINLESS STEEL

ASTM F593 C ¼ TO 5/8

ASTM F593 D ¾ TO 1-1/2

316 STAINLESS STEEL

ASTM F593 G ¼ TO 5/8

ASTM F593 H ¾ TO 1-1/2

F593, F594 - ASTM F593 is a specification for stainless hex head cap screws: ASTM F594 is for stainless nuts. Compared to regular (18-8) stainless fasteners, F593 and F594 call for: (a) tensile requirements about 20% higher than that of commercial 18-8 or stainless hex caps and nuts to MS Specifications (MS35307-8, MS34649-50); (b) both a minimum and a maximum tensile and hardness requirements while commercial and MS fasteners do not have a maximum; (c) chemical requirements that (eliminate) many commonly used mixtures of 300 or 18-8 stainless while allowing others. (courtesy Star Stainless Screw) F593C, F593D, F593G, and F593H are commonly seen spec's in this group.

				Full Size Tests			Machined Specimen Tests		
Stainless Alloy Group	Condition	Alloy Mechanical Property Marking	Nominal Diameter	Tensile Strength ksi c	Yield Strength ksi c/d	Rockwell Hardness	Tensile Strength ksi d	Yield Strength ksi c/d	Elon-gation in 4D %
303, 304, 305, 384, XM1, XM7,302Se	CW1	F593C	1/4 to 5/8	100 to 150	65	B95 to C32	95	60	20
	CW2	F593D	3/4 to1-1/2	85 to 140	45	B80 to C32	80	40	25
316	CW1	F593G	1/4 to 5/8	100 to 150	65	B95 to C32	95	60	20
	CW2	F593H	3/4 to 1-1/2	85 to 140	45	B80 to C32	80	40	25

Condition - CW - Hardened and rolled from annealed stock, thus acquiring a degree of cold work, sizes .75 in and larger may be hot worked
<c> Yield Strength is the stress at which an offset of .2% gage length occurs
<d> Machined from strain hardened stock
Extra Note - The industry standard of thread length of twice the diameter + 1/4 or 1/2 (depending on the length) does not necessarily apply on the F593 spec. If thread length is important, be sure to cover this with your supplier)

Stainless Benefits / Issues

- Galling - Anti-seize
- Anti-seize not required with Blue nut
- “Burning”
- Stretching – re-torque
- Corrosion Protection

TRIPAC

Stainless and Blue Nut

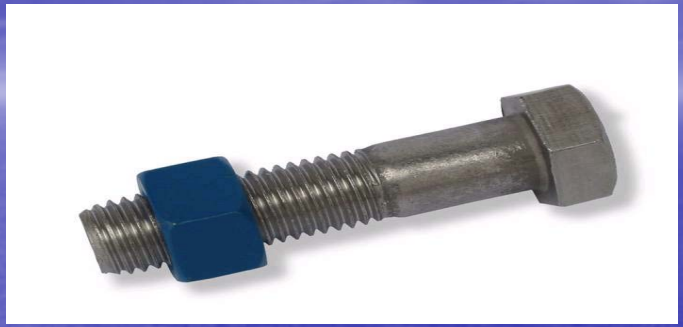

- No Anti-Seize
- Higher Tension Without Over Stressing The Bolt
- Rarely a Need for Re-tightening

TRIPAC

FLANGE BOLT TORQUE GUIDELINES

WEB DATA 10.03-2
June 2005
Supersedes January,2005

DeZURIK Water Controls

Nominal Valve Size	Flange Bolting		Compressed Non-asbestos Hard Gasket		
	Number of Bolts	Flange Bolt Size	Recommended Bolt Load	Bolt Torque Non-lubricated	Bolt Torque Lubricated
4	8	5/8 x 11	3,980	94	29
6	8	3/4 x 10	4,810	136	42
8	8	3/4 x 10	6,860	193	60
10	12	7/8 x 9	6,210	209	68
12	12	7/8 x 9	9,570	321	105
14	12	1 - 8	11,700	468	147

Torque & Lubrication

- Cad 25%
- Zinc 15%
- Oiled 15%
- Xylan 50-70%
- Common Practice is Oiled
- Who provides Torque Values

TRIPAC

T-Head Bolts

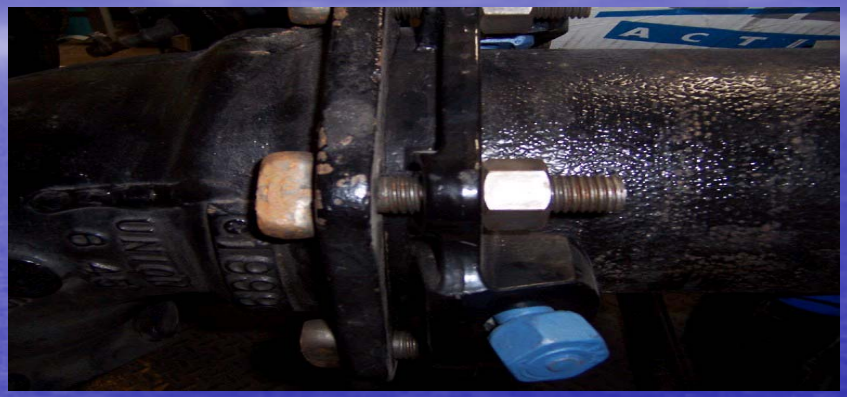

- Available in low alloy, Corten & Stainless Steel

Coatings

- Cadmium
- Zinc
- Hot-dip Galvanized
- TRIPAC 2000

TRIPAC FASTENERS

FOR THE WATER WORKS AND CONSTRUCTION INDUSTRIES

TRIPAC 2000 BLUE COATING SYSTEM

TRIPAC 2000 BLUE | PLAIN STEEL | ZINC PLATED | HOT DIP GALVANIZED

ASTM A307, GR A BOLTS AFTER 1,000 HOURS OF SALT SPRAY TESTING

Bolts protected with **TRIPAC 2000 BLUE COATING SYSTEM** show no signs of corrosion after 1,000 hours of salt spray testing (ASTM-B-117). Plain steel, zinc plated, and hot dip galvanized bolts all show significant degrees of corrosion and rust.

Tripac's unique coating system encompasses careful surface preparation which includes abrasive blasting prior to being treated with a baked aerocote nickel primer. All fasteners are then electrostatically sprayed with multiple coats of **TRIPAC 2000 BLUE**, and baked at 425 degrees.

TRIPAC 2000 BLUE is a fluoropolymer coating which combines a wide range of mechanical and chemical properties ideally suited to the wide range of fasteners used in water works applications. It offers low friction, abrasion resistance, corrosion and chemical protection. Fasteners are easily tightened and removed.

Safety is improved and costs are lowered because in most cases the fasteners can be removed with a wrench instead of using a cutting torch. Even after 3,000 hours in salt spray testing, nuts are still easily removed.

TRIPAC FASTENERS, A DIVISION OF TRIPAC MARKETING, INC.
475 Klug Circle, Corona, CA 92880 (951) 280-4488 Fax (951) 272-4445 www.tripaconline.com

TRIPAC

Salt Spray

1000 Hours

TRIPAC

FASTENERS FOR CORROSIVE ENVIRONMENTS

	Brass and Naval Bronze	Silicon Bronze	Monel Metal	Stainless Types 410, 416 and 430	Stainless Types 302, 303, 304 and 305	Stainless Type 316	Copper	Aluminum	Nylon
Carbon Dioxide (Wet & Aqueous)	Fair[11]	Good[11]	Good[11]	Excel[11]	Excel	Excel	Good[11]	Excel	Excel
Carbon Disulfide	Fair	Poor	Fair	Good	Excel	Excel	Poor	Excel	Excel
Carbon Tetrachloride[12]	Excel	Excel	Excel	Excel	Excel	Excel	Excel	Good	Excel
Chlorine (Dry)	Good	Good	Excel	Good	Good	Good	Good	Poor	Poor
Chlorine (Wet)	Poor	Fair	Fair	Poor	Poor	Fair	Fair	Poor	Poor
Chromic Acid	Poor	Poor	Fair	Fair	Good	Excel	Poor	Poor	Poor
Citric Acid	Fair[1]	Good	Good	Fair	Good	Excel	Good	Good	Good
Coke Oven Gas	Fair	Fair	Good	Excel	Excel	Excel	Fair	Good	Fair
Copper Sulfate	Poor	Fair	Fair	Excel	Excel	Excel	Fair	Poor	Fair
Core Oils	Excel	Excel	Excel	Excel	Excel	Excel	Excel	Excel	Excel
Cottonseed Oil	Excel	Excel	Excel	Excel	Excel	Excel	Excel	Excel	Excel
Creosote	Fair	Good	Excel	Excel	Excel	Excel	Good	Good	
Ethers	Excel	Excel	Excel	Excel	Excel	Excel	Excel	Excel	Excel
Ethylene Glycol	Good	Excel	Excel	Excel	Excel	Excel	Excel	Good	Good
Ferric Chloride	Poor	Poor	Poor	Poor	Poor	Poor	Poor	Poor	Poor
Ferric Sulfate	Poor	Fair	Fair	Excel	Excel	Excel	Fair	Good	Poor
Formaldehyde	Good	Good	Excel	Excel	Excel	Excel	Good	Good	Good

Galvanic Scale

- **ANODIC / LESS NOBLE / CORRODED END**
  - Zinc
  - Aluminum
  - Galvanized Steel
  - Cadmium
  - Mild Steel, Wrought Iron
  - Cast Iron
  - Lead
  - Brass, Bronze
  - Copper
  - Stainless T-304 F593 C or D
  - Stainless T-316 F593 G or H
  - **CATHODIC / MORE NOBLE / PROTECTED END**

TRIPAC

Corrosion Costs

- U.S. Federal Highway Admin - Mandated by Congress
  - in conjunction with NACE
- Direct Annual Cost $276 B
  - Utilities $47.9 B
  - Drinking Water & Sewer - $36 B

TRIPAC

TWO YEAR STUDY BY NACE FOR THE US GOVERNMENT: 36 BILLION DOLLARS ANNUAL CORROSION COSTS

- UNFORTUNATELY, THERE IS A LACK OF COMPLETE AND UP TO DATE INFORMATION ON ALL WATER SYSTEMS, WITH LIMITED COMMUNICATION AMONG WATER UTILITIES, AND THUS, LIMITED AWARENESS AND IMPLEMENTATION OF AVAILABLE CORROSION CONTROL TECHNOLOGIES

TRIPAC

WAS

WATER AGENCIES' STANDARDS

Construction Specifications

Signatory Agencies

Helix Water District
7811 University Avenue
La Mesa, CA 91941-4927

Lakeside Water District
10375 Vine Street
Lakeside, CA 92040

Otay Water District
2554 Sweetwater Springs Blvd.
Spring Valley, CA 91978-2096

Padre Dam Municipal Water District
10887 Woodside Avenue
PO Box 719003
Santee, CA 92072-9003

Riverview Water District
11769 Waterhill Road
Lakeside, CA 92040-2998

San Dieguito Water District
505 Vulcan Avenue
Encinitas, CA 92024

Visit The Website At: www.sdwas.com

Questions

TRIPAC

February 19, 2007

Rev. 02

<u>Bolts and Nuts for Flanged Connections</u>

Bolts and nuts shall be as indicated below (select the appropriate specification **and** finish):

Specification: (select one)

307 A

Bolts and nuts shall be carbon steel with a minimum 60,000 PSI tensile strength conforming to ASTM A307, Grade A. Bolts shall be standard ANSI B1.1, Class 2A coarse threads. Nuts shall conform to ASTM A563 and be standard ANSI B1.1, Class 2A coarse threads. All bolt heads and nuts shall be hexagonal. Identification on the head of the bolt shall be *A 307 A*.

307 B

Bolts and nuts shall be carbon steel with a minimum 60,000 PSI tensile strength conforming to ASTM A307, Grade B. Bolts shall be standard ANSI B1.1, Class 2A coarse threads. Nuts shall conform to ASTM A563 and be standard ANSI B1.1, Class 2A coarse threads. All bolt heads and nuts shall be heavy hexagonal for greater bearing area. Identification on the head of the bolt shall be *A 307 B*.

Grade 5 Carbon Steel Bolts

Bolts shall be carbon steel with a minimum 105,000 PSI tensile strength conforming to SAE J429. Bolts shall be standard ANSI B1.1, Class 2A coarse threads. Nuts shall conform to ASTM A563 and be standard ANSI B1.1, Class 2A coarse threads. All bolt heads and nuts shall be hexagonal. Identification on the head of the bolt shall be *three slash marks*.

T-316 Stainless Steel (Finished Pattern)

Bolts and nuts shall be stainless steel conforming to ASTM F593 for bolts and ASTM F594 for nuts. Bolts shall be threaded to conform to ANSI B 18.2.1, page C-1 for finished hex bolts. Nuts shall conform to ANSI B 18.2.2, page D-1. Nuts shall be finished with TRIPAC 2000 coating system to minimize galling and ensure proper torque. Anti-seize compound shall not be utilized with the blue nuts. All bolt heads and nuts shall be hexagonal. Identification on the head of the bolt shall be *T-316, 316, F593G or F593H*.

B8M T-316 Stainless Steel (Heavy Pattern)

Bolts and nuts shall be stainless steel conforming to ASTM A193 Grade B8M for bolts and ASTM A194 Grade 8M for nuts. Bolts shall be threaded to conform to ANSI B 1.1, Class 2A coarse threads. Nuts shall conform to ASTM A194. Nuts shall be finished with TRIPAC 2000 coating system to minimize galling and ensure proper torque. Anti-seize compound shall not be utilized with the blue nuts. All bolt heads and nuts shall be heavy hexagonal. Identification on the head of the bolt shall be *B8M*.

Finish: (select one)

Bolts and nuts shall be plain finish.

Bolts and nuts shall be Zinc plated to reduce the effects of corrosion.

Bolts and nuts shall be provided with a hot dipped or mechanically galvanized finish to reduce the effects of corrosion. “Overtapped” nuts and holes may be required when hot dipped bolts are specified.

Bolts and nuts shall be finished with the **TRIPAC 2000** coating system to significantly reduce the effects of corrosion. A multi-step process shall be utilized to chemically clean, abrasive blast and prime with zinc/nickel phosphate primer prior to application of the Xylan fluoropolymer. Wear resistance (K-Factor) shall be in the range of 6 to 8 (excellent) and minimal effects should be seen after a 3000 hour Salt Spray test conforming to ASTM B-117.

<u>Mechanical Joint T-Head Bolts</u>

A242 Steel Bolts

Bolts shall be ASTM A242 weathering steel with minimum yield strength of 45,000 PSI. All T-Bolts & nuts shall be threaded in accordance with ANSI/ASME B1.1, Class 2A fit, with coarse-thread series. Heavy hex nuts shall be used. Bolt heads shall be in accordance with the dimensions of ANSI/AWWA C111 / A21.11-95.

Hydrant Break-Off Bolts

307A Break-Off Bolts

Bolts and nuts shall be carbon steel with a minimum 60,000 PSI tensile strength conforming to ASTM A307, Grade A. Bolts shall be standard ANSI B1.1, Class 2A coarse threads. Nuts shall conform to ASTM A563 and be standard ANSI B1.1, Class 2A coarse threads. All bolt heads and nuts shall be hexagonal. Identification on the head of the bolt shall be *A 307 A*. *5/8" diameter break-off bolts shall have an 11/32" hole drilled in the shank 2 3/8" deep. ¾"diameter break-off bolts shall have a 13/32" hole drilled in the shank 2 3/8" deep. The bored out holes shall be 100% filled with silicon to prevent moisture from corroding the bolt internally.*

Meter Bolts

Silicon Bronze Bolts

Bolts and nuts shall be silicon bronze conforming to ASTM F 468. Material shall meet UNS Alloy number C65100, Alloy 651, low silicon bronze B. Bolts shall be standard ANSI B1.1, Class 2A coarse threads. All bolt heads and nuts shall be hexagonal. Washers shall be of the same material as the bolts and nuts. Identification on the head of the bolt shall be *651, SB or unmarked.*

INDUSTRY STANDARDS

MECHANICAL PROPERTIES

When strength requirements are moderate, low-carbon steel is used. High-strength fasteners are made from medium-high carbon or alloy steels and are heat treated to develop desired properties.

Most fasteners are covered by specifications that define required mechanical properties such as tensile strength, yield strength, proof load and hardness.

- **Tensile Strength**: The maximum tensile stress in pounds per sq in. which a material is capable of sustaining, as developed by a tension test.
- **Yield Strength**: The stress at which a material exhibits a specified deviation from the proportionality of stress to strain. The deviation is expressed in terms of strain, and in the offset method, usually a strain of 0.2% is specified.
- **Proof Load**: The point to which a material may be stressed without evidence of permanent deformation.
- **Hardness**: The resistance of a material to plastic deformation. Usually measured in steels by the Brinell, Rockwell, or Vickers indentation-hardness test methods.

HEAT PROPERTIES

Heat treatment covers various techniques that may be used to develop certain end-product characteristics. Customary procedures for fasteners include:

- **Stress Relieving**: A thermal cycle involving heating to a suitable temperature, usually 1000/1200°F, holding long enough to reduce residual stresses from either cold deformation or thermal treatment, and then cooling slowly enough to minimize the development of new residual stresses.
- **Annealing**: A thermal cycle involving heating to and holding at a suitable temperature and then cooling at a suitable rate, for such purposes as reducing hardness, improving mechinability, facilitating cold working, producing a desired microstructure, or obtaining desired mechanical or other properties.
- **Case Hardening**: A term descriptive of one or more processes of hardening steel in which the outer portion, or case, is made substantially harder than the inner portion, or core.
- **Quenching and Tempering**: Quenching is a thermal process used to increase the hardness and strength of steel. Tempering improves ductility and toughness but reduces the quenched hardness.

ASTM & SAE HEAD MARKINGS FOR BOLTS

A307 A	ASTM—A307 GR A	• Low or Medium Carbon Steel
A307 B	ASTM—A307 GR B	• Low or Medium Carbon Steel
	ASTM—A449 GR B	• Medium Carbon Steel Quenched & Tempered
B 7	ASTM—A193 GR B7	• Chrom-Moly Steel Quenched & Tempered
A325	ASTM—A325 Type 1	• Medium Carbon Steel Quenched & Tempered
	18-8 18 Chromium 8 Nickel	• "300" Series Stainless Steel Same Material as T-304
T-304 or F 593 C or D	ASTM—T 304 or ASTM F 593	• "300" Series Stainless Steel • Either Marking May Appear
T-316 or F 593 G or H	ASTM—T 316 or ASTM F 593	• "300" Series Stainless Steel • Either Marking May Appear
B 8	ASTM—A193 Gr B8	• Solution Treated 304 - 304L Stainless Steel
B8M	ASTM—A193 GR B8M	• Solution Treated 316 - 316L Stainless Steel

475 KLUG CIRCLE • CORONA, CA 92880-6406
(951) 280-4488 • FAX: (951) 272-4445

WRENCH SIZE CHARTS

This chart may be used for
HEX Bolts & Nuts A307 Gr. A, Gr. 5,
ASTM F593/F594 Type 304 & 316

Bolt and Nut Diameter	Wrench Size	
1/4	7/16	0.4375
5/16	1/2	0.5000
3/8	9/16	0.5625
7/16	5/8	0.6250
1/2	3/4	0.7500
9/16	13/16	0.8125
5/8	15/16	0.9375
3/4	1 1/8	1.1250
7/8	1 5/16	1.3125
1	1 1/2	1.500
1 1/8	1 11/16	1.6875
1 1/4	1 7/8	1.8750
1 3/8	2 1/16	2.0625
1 1/2	2 1/4	2.2500
1 5/8	2 7/16	2.4375
1 3/4	2 5/8	2.6250
1 7/8	2 13/16	2.8125
2	3	3.000
2 1/4	3 3/8	3.3750
2 1/2	3 3/4	3.7500
2 3/4	1 1/8	4.1250
3	4 1/2	4.5000
3 1/4	4 7/8	4.8750
3 1/2	5 1/4	5.2500
3 3/4	5 5/8	5.6250
4	6	6.0000

This chart may be used for
HEAVY Hex Bolts & Nuts A307 Gr. B,
A325, A193 B7, B8 (304), B8M (316) Stainless

Bolt and Nut Diameter	Wrench Size	
1/2	7/8	0.8750
5/8	1 1/16	1.0625
3/4	1 1/4	1.2500
7/8	1 7/16	1.4375
1	1 5/8	1.6250
1 1/8	1 13/16	1.8125
1 1/4	2	2.0000
1 3/8	2 3/16	2.1875
1 1/2	2 3/8	2.3750
1 5/8	2 9/16	2.5625
1 3/4	2 3/4	2.7500
1 7/8	2 15/16	2.9375
2	3 1/8	3.1250
2 1/4	3 1/2	3.5000
2 1/2	3 7/8	3.8750
2 3/4	4 1/4	4.2500
3	4 5/8	4.6250
3 1/4	5	5.0000

TRIPAC
A Division of Tripac Marketing, Inc.
475 Klug Circle • Corona, CA 92880-6406
(951) 280-4488 • Fax: (951) 272-4445

FLANGE BOLTING CHARTS

AWWA C110 DUCTILE AND GRAY IRON 125/150

NOM PIPE SIZE	NO. BOLTS	DIAMETER & LENGTH
2"	4	5/8 X 2 1/4
2 1/2"	4	5/8 X 2 1/2
3"	4	5/8 X 2 1/2
4"	8	5/8 X 3
6"	8	3/4 X 3 1/4
8"	8	3/4 X 3 1/2
10"	12	7/8 X 3 3/4
12"	12	7/8 X 3 3/4
14"	12	1 X 4 1/4
16"	16	1 X 4 1/2
18"	16	1 1/8 X 4 3/4
20"	20	1 1/8 X 5
24"	20	1 1/4 X 5 1/2
30"	28	1 1/4 X 6 1/4
36"	32	1 1/2 X 7
42"	36	1 1/2 X 7 1/2
48"	44	1 1/2 X 7 3/4

ASME/ANSI B16.1 CAST IRON 250/300

NOM PIPE SIZE	NO. BOLTS	DIAMETER & LENGTH
2"	8	5/8 X 2 3/4
2 1/2"	8	3/4 X 3 1/4
3"	8	3/4 X 3 1/2
4"	8	3/4 X 3 3/4
6"	12	3/4 X 4
8"	12	7/8 X 4 1/2
10"	16	1 X 5 1/4
12"	16	1 1/8 X 5 1/2
14"	20	1 1/8 X 6
16"	20	1 1/4 X 6 1/4
18"	24	1 1/4 X 6 1/2
20"	24	1 1/4 X 6 3/4
24"	24	1 1/2 X 7 3/4
30"	28	1 3/4 X 8 1/2
36"	32	2 X 9 1/2
42"	36	2 X 10
48"	40	2 X 10

AWWA C110 MECHANICAL JOINTS T-HEAD BOLT CHART

NOM PIPE SIZE	NO. BOLTS	DIAMETER & LENGTH
2"	2	5/8 X 3
3"	4	5/8 X 3
4"	4	3/4 X 3 1/2
6"	6	3/4 X 3 1/2
8"	6	3/4 X 4
10"	8	3/4 X 4
12"	8	3/4 X 4
14"	10	3/4 X 4 1/2
16"	12	3/4 X 4 1/2
18"	12	3/4 X 4 1/2
20"	14	3/4 X 4 1/2
24"	16	3/4 X 5
30"	20	1 X 6
36"	24	1 X 6
42"	28	1 1/4 X 6
48"	32	1 1/4 X 6

TRIPAC FASTENERS IS A MEMBER OF THE AWWA AND HAS THE TECHNICAL EXPERTISE TO ASSIST YOU IN SELECTING THE PROPER MATERIALS FOR YOUR NEEDS. CALL OR FAX FOR QUOTES, ADDITIONAL INFORMATION, SPECIAL ORDERS OR FOR TECHNICAL ASSISTANCE.

TRIPAC

TRIPAC FASTENERS, A DIVISION OF TRIPAC MARKETING, INC.
475 KLUG CIRCLE • CORONA, CA 92880-5406
(951) 280-4488 • FAX (951) 272-4445

Electromotive Series

	Potential Neg. to Saturated CuSO4 Half Cell (Volts)
*Magnesium(H-1 alloy)	1.550
*Zinc	1.106
*Aluminum (ALCLAD 3S)	1.016
Cast Iron (fresh)	.686
Carbon Steel	.686
Ni-Resist Cast Iron, 20% Ni	.616
Ni- Resist Cast Iron, 30% Ni	.566
Ni -Resist Cast Iron, 20% Ni + Cu	.536
Naval Rolled Brass	.476
Yellow Brass	.436
Red Brass	.406
G. Bronze	.386
Admiralty Brass	.366
90:10 Cu-Ni + .8% Fe	.356
70:30 Cu-Ni + .06% Fe	.346
70:30 Cu-Ni + .47% Fe	.326
Stainless Steel Type (2) 430, 17% Cr	.296
Nickel	.276
Inconel	.246
Titanium (commercial)	.226
Stainless Steel type (2) 410, 13% Cr	.226
Silver	.206
Titanium (high purity)	.176
Stainless Steel Type(2) 304, 18% Cr, 8% Ni	.156
Hastelloy C	.156
Monel	.156
Stainless Steel Type (2) 316, 18% Cr, 8% Ni, 3% Mo	.126

* These metals sacrifice themselves more easily for metals down below (ex: ss, monel)

TRIPAC

TRIPAC FASTENERS, A DIVISION OF TRIPAC MARKETING, INC.
475 KLUG CIRCLE • CORONA, CA 92880-5406
(951) 280-4488 • FAX (951) 272-4445