Water Resources Committee and Engineering Committee
Preconference Seminar 1 (PC1)

Aquifer Storage and Recovery (ASR) Engineering Considerations

Wednesday May 12, 2010

Presented by:
Chris Uber, P.E., Senior Vice President,
Murray, Smith & Associates, Inc.

MSA

pnws · awwa WATER WORKS conference 2010 · May 12-14 tacoma

Presentation Overview

- System Planning and Well Siting
- Engineering/Design Elements
- Well Design and Drilling
- Wellhead/Wellhouse Site Layout
- Wellhouse Designs
- Typical Groundwater Production Well Design Elements
- ASR Well Design Features
- Downhole Control Valve
- Project Construction and Assembly Photos
- Conclusion
- Q & A

MSA

pnws · awwa WATER WORKS conference 2010 · May 12-14 tacoma

System Planning and Well Siting

- Master Planning and Supply Source Planning
- Siting a typical production well constrained by a number of factors:
  - Hydrogeology
  - Water rights/availability
  - Property
  - Proximity to demand centers
- Siting an ASR well includes considering additional factors
  - Proximity to injection/source water piping system
  - Configuration, capacity and pressure of injection water delivery system piping

WATER SYSTEM MASTER PLAN

WELL DRILLING IN A NEIGHBORHOOD SETTING

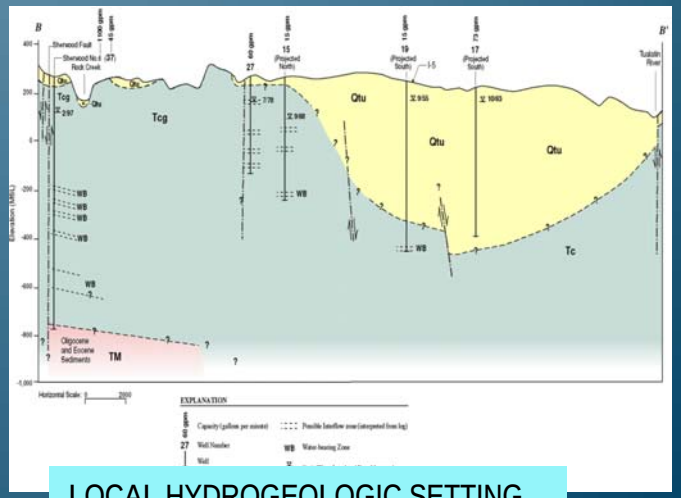

LOCAL HYDROGEOLOGIC SETTING

Engineering/Design Elements

- Production Capacity
- Flow Control
  - Production
  - Injection
- Water Quality
  - Treatment/Disinfection
- Operational Needs
  - Production Cycle
  - Injection Cycle
    - Rate/Flow control
    - Water Quality
    - Reporting/Monitoring needs

MSA

pnws • awwa WATER WORKS conference 2010 • May 12-14 tacoma

Well Design and Drilling

- Realm of the Hydrogeologists
- Piping design capacities are tied to the production yield of the wells
- The typical injection rate is less than the production, so the production rate controls

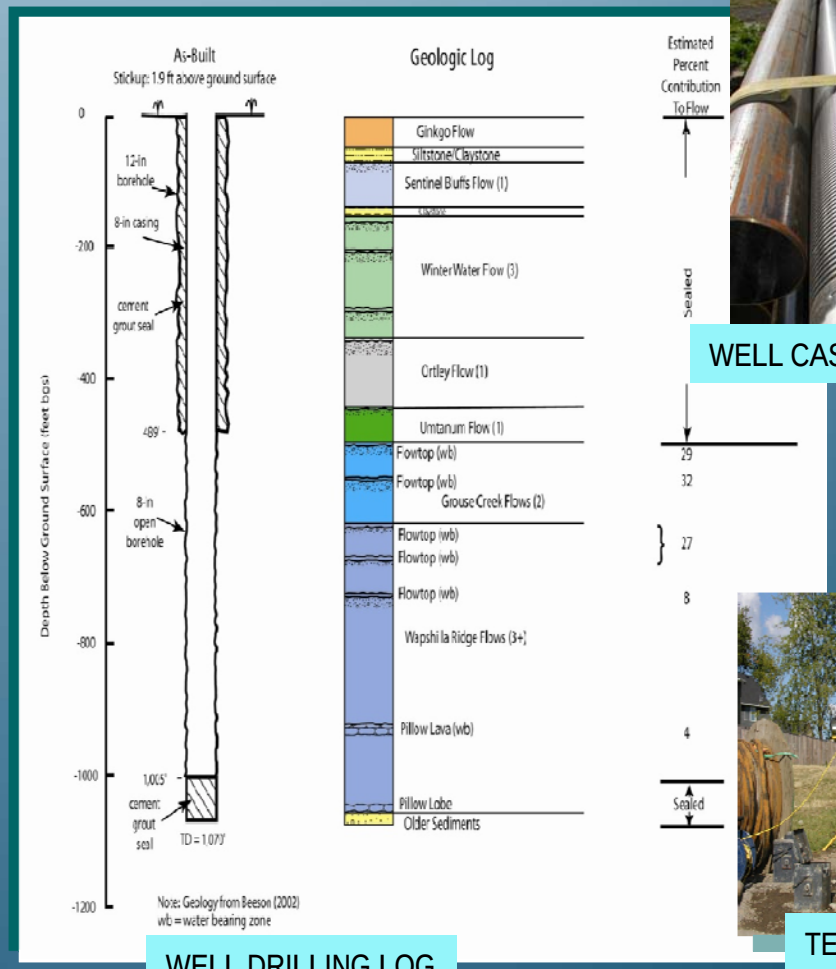

WELL DRILLING LOG

WELL CASING

TEST PUMPING

MSA

pnws · awwa WATER WORKS conference 2010 · May 12-14 tacoma

Wellhead/Well House Site Layout

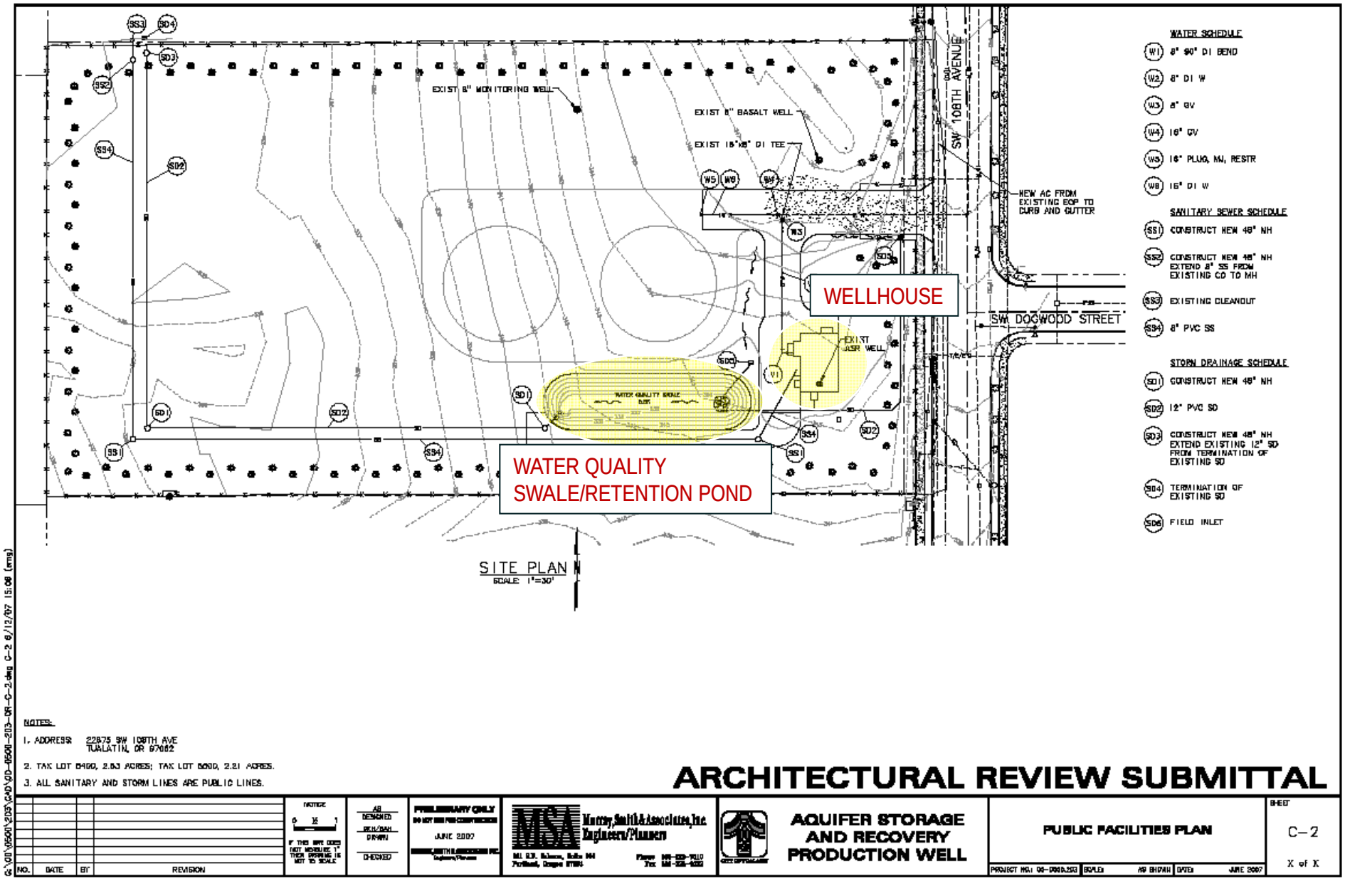

Wellhouse Designs

- Larger Building Footprint
- Neighborhood Aesthetics/Integration

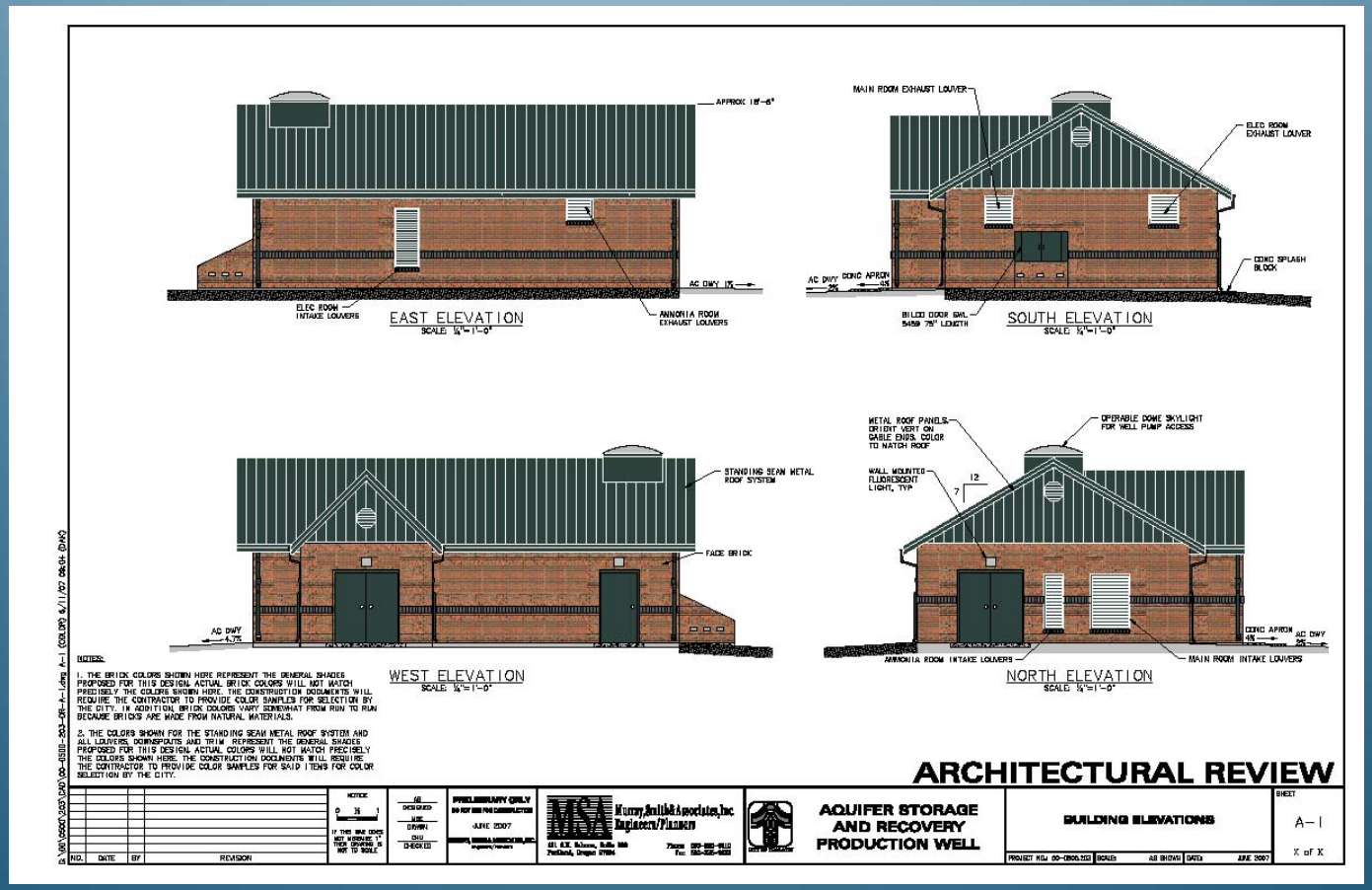

MSA
pnws · awwa WATER WORKS conference 2010 · May 12-14 tacoma

Typical Groundwater Production Well Design Elements

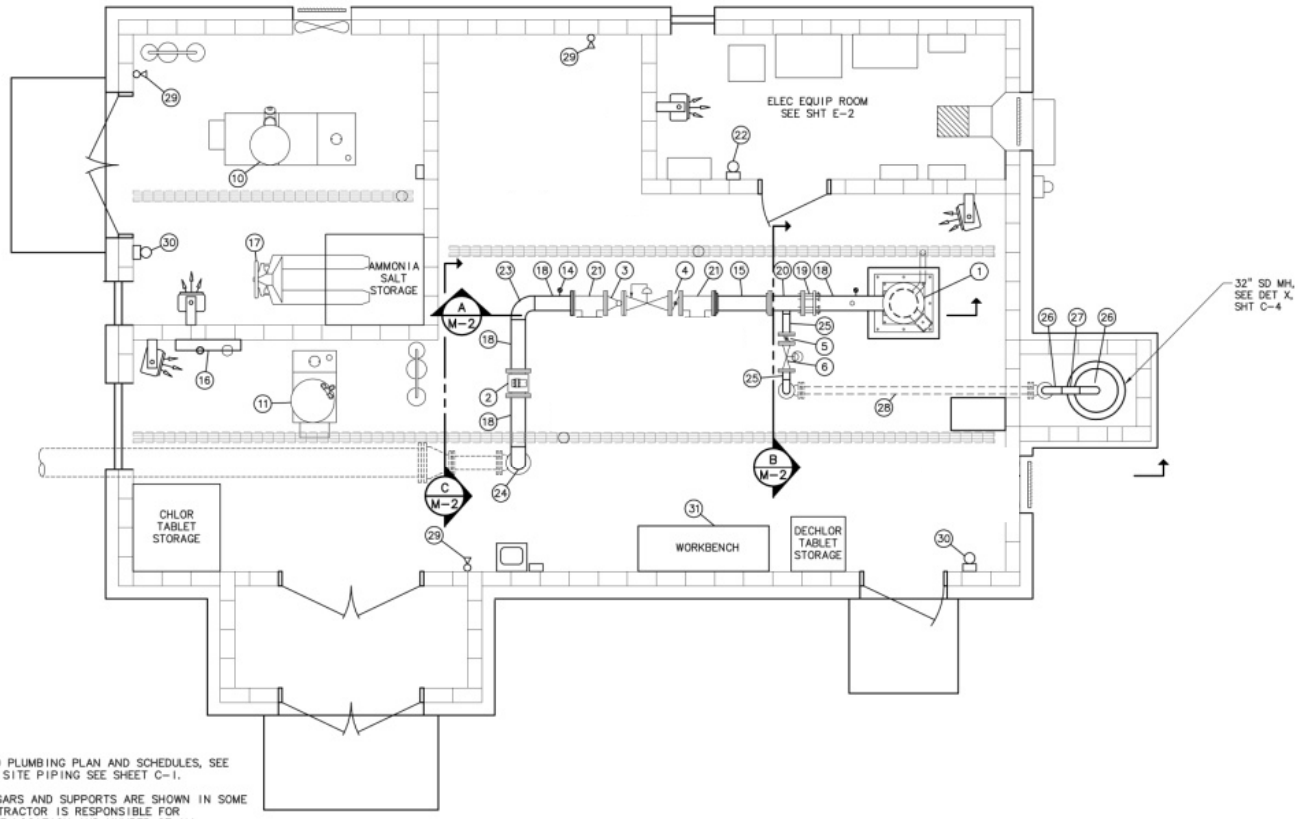

WELL HOUSE FLOOR PLAN
SCALE: 3/8"=1'-0"

MECHANICAL SCHEDULE:

1. P101, DEEP WELL OLS VERT TURBINE PUMP W/PUMP BASE, SEE SPECS & SHT M-2 DETS
2. 8" MAGNETIC FLOW METER, SEE SPECS
3. 8" SILENT CHKV, FLG
4. 8" BFV, FLG
5. 4" BFV, FLG
6. FV104, 4" ELECTRONICALLY CONTROLLED, HYDRAULICALLY OPERATED, GLOBE-STYLE, PRESSURE SUSTAINING DIAPHRAGM VALVE
7. FV103, 8" ELECTRONICALLY CONTROLLED, HYDRAULICALLY OPERATED, GLOBE-STYLE, PRESSURE SUSTAINING DIAPHRAGM VALVE
8. FV102, 8" ELECTRONICALLY CONTROLLED, HYDRAULICALLY OPERATED, GLOBE-STYLE DIAPHRAGM VALVE
9. TABLET DECHLORINATION SYSTEM
10. AMMONIA FEED SYSTEM
11. TABLET CHLORINATION SYSTEM
12. WATER QUALITY INSTRUMENT PANEL, SEE DET 1, SHT M-3
13. X" DEEP WELL VERT TURBINE PUMP AIR VALVE ON X" WELD-O-LET W/ BV & COP TO DRAIN
14. PRESSURE GAUGE & SAMPLE STATION, SEE DET 3, SHT M-3
15. 8" STATIC MIXER
16. PW/NPW MANIFOLD, SEE DET 1, SHT M-4
17. PALLET JACK
18. 8" WS SPL, FLGXPE, LENGTH AS REQ'D
19. RESTRAINED FCA, SIZE PER PIPE
20. 8"X4" WS TEE, FLGXFLGXPE
21. 8"X8" WS TEE, FLGXFLGXFLG
22. 10 POUND CO2 FIRE EXTINGUISHER
23. 8" WS 90° BEND, PEXPE
24. 8" WS 90° BEND
25. 4" WS SPL, FLGXPE, LENGTH AS REQ'D
26. 4" WS 90° BEND
27. 4" WS SPL, PEXPE, LENGTH AS REQ'D
28. 4" DI, LENGTH AS REQ'D
29. HOSE BIBB, SEE DET 6, SHT M-3
30. 10 POUND MPDC FIRE EXTINGUISHER
31. MODULAR WORKBENCH 72" WIDE, 4 DRAWER/1 DOOR W/MAPLE TOP, EDSAL MODEL 600-72-M OR EQUAL
32. STANDON PIPE SUPPORT, SEE NOTE 2

NOTES:

1. FOR HVAC AND PLUMBING PLAN AND SCHEDULES, SEE SHEET M-4. FOR SITE PIPING SEE SHEET C-1.
2. SPECIAL HANGARS AND SUPPORTS ARE SHOWN IN SOME LOCATIONS. CONTRACTOR IS RESPONSIBLE FOR DETERMINING THE LOCATION AND NUMBER OF ALL ADDITIONAL SUPPORTS TO PROPERLY SUPPORT PIPING, VALVES AND EQUIPMENT CONNECTIONS TO PREVENT DEFLECTION AND STRESSES.
3. FOR ALL FLANGES NEAR WALL AND FLOOR PENETRATIONS FOR WHICH NO DIMENSION IS GIVEN, FLANGE FACE MUST BE 6" MINIMUM FROM WALL OR FLOOR.
4. MECHANICAL JOINT RESTRAIN REQUIRED ON ALL UNDERGROUND PIPE AND FITTINGS.

NO.	DATE	BY	REVISION

NOTICE: 0 ½ 1 — IF THIS BAR DOES NOT MEASURE 1" THEN DRAWING IS NOT TO SCALE

JDH DESIGNED
HCM DRAWN
BMG CHECKED

PRELIMINARY ONLY
DO NOT USE FOR CONSTRUCTION
JANUARY 2008
MURRAY, SMITH & ASSOCIATES, INC. Engineers/Planners

MSA Murray, Smith & Associates, Inc. Engineers/Planners
121 S.W. Salmon, Suite 900 Portland, Oregon 97204 PHONE 503-225-9010 FAX 503-225-9022

CITY OF TUALATIN

AQUIFER STORAGE AND RECOVERY WELL HOUSE

MECHANICAL FLOOR PLAN AND SECTIONS

PROJECT NO.: 00-0500.203 | SCALE: AS SHOWN | DATE: JANUARY 2008

SHEET M-1 X of X

S:\00\0500\203\CAD\00-0500-203-DR-M-1_3.dwg M-1 1/11/08 11:33 [EngCAD]

ASR Well Design Features

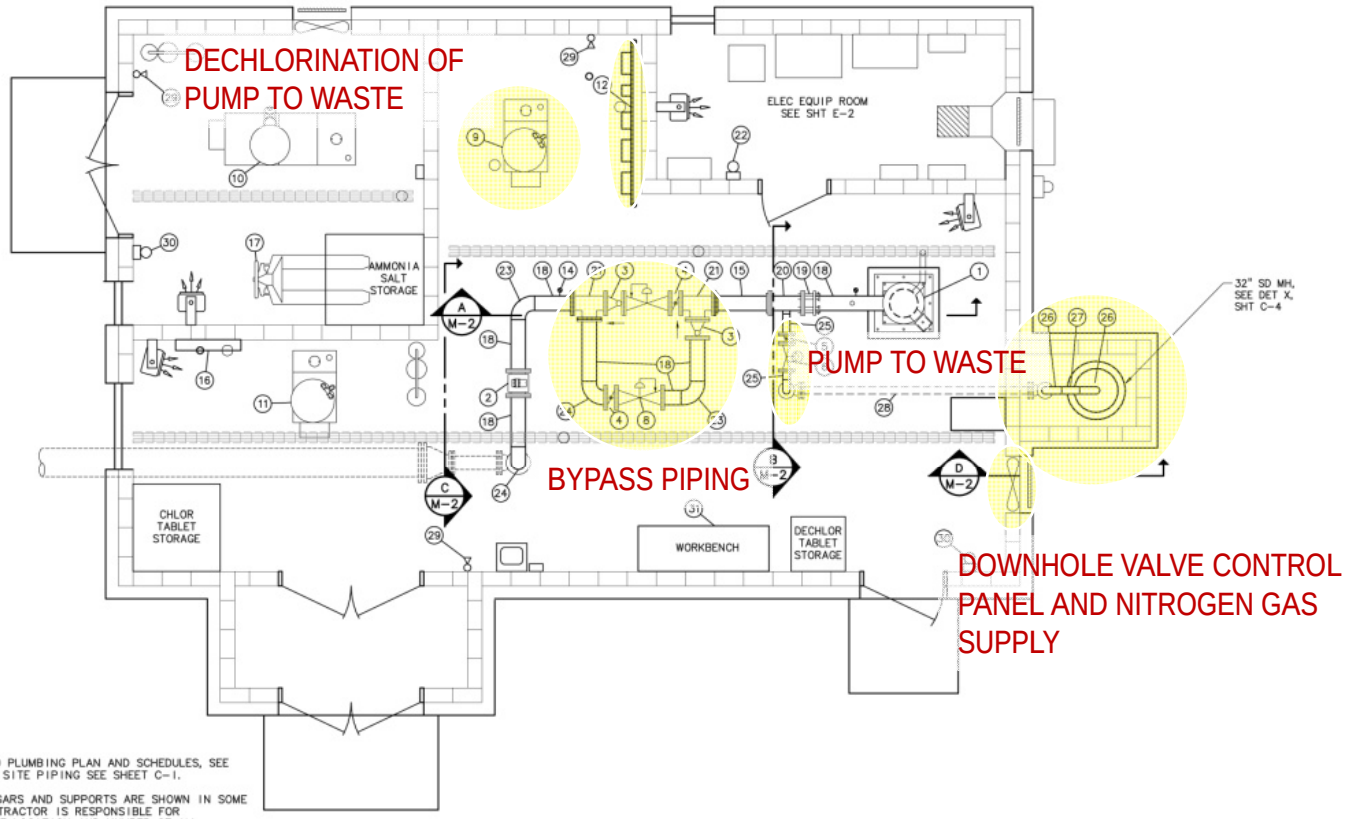

WELL HOUSE FLOOR PLAN
SCALE: 3/8" = 1'-0"

MECHANICAL SCHEDULE:

1. P101, DEEP WELL OLS VERT TURBINE PUMP W/PUMP BASE, SEE SPECS & SHT M-2 DETS
2. 8" MAGNETIC FLOW METER, SEE SPECS
3. 8" SILENT CHKV, FLG
4. 8" BFV, FLG
5. 4" BFV, FLG
6. FV104, 4" ELECTRONICALLY CONTROLLED, HYDRAULICALLY OPERATED, GLOBE-STYLE, PRESSURE SUSTAINING DIAPHRAGM VALVE
7. FV103, 8" ELECTRONICALLY CONTROLLED, HYDRAULICALLY OPERATED, GLOBE-STYLE, PRESSURE SUSTAINING DIAPHRAGM VALVE
8. FV102, 8" ELECTRONICALLY CONTROLLED, HYDRAULICALLY OPERATED, GLOBE-STYLE DIAPHRAGM VALVE
9. TABLET DECHLORINATION SYSTEM
10. AMMONIA FEED SYSTEM
11. TABLET CHLORINATION SYSTEM
12. WATER QUALITY INSTRUMENT PANEL, SEE DET 1, SHT M-3
13. X" DEEP WELL VERT TURBINE PUMP AIR VALVE ON X" WELD-O-LET W/ BV & COP TO DRAIN
14. PRESSURE GAUGE & SAMPLE STATION, SEE DET 3, SHT M-3
15. 8" STATIC MIXER
16. PW/NPW MANIFOLD, SEE DET 1, SHT M-4
17. PALLET JACK
18. 8" WS SPL, FLGXPE, LENGTH AS REQ'D
19. RESTRAINED FCA, SIZE PER PIPE
20. 8"X4" WS TEE, FLGXFLGXPE
21. 8"X8" WS TEE, FLGXFLGXFLG
22. 10 POUND CO2 FIRE EXTINGUISHER
23. 8" WS 90° BEND, PEXPE
24. 8" WS 90° BEND
25. 4" WS SPL, FLGXPE, LENGTH AS REQ'D
26. 4" WS 90° BEND
27. 4" WS SPL, PEXPE, LENGTH AS REQ'D
28. 4" DI, LENGTH AS REQ'D
29. HOSE BIBB, SEE DET 6, SHT M-3
30. 10 POUND MPDC FIRE EXTINGUISHER
31. MODULAR WORKBENCH 72" WIDE, 4 DRAWER/1 DOOR W/MAPLE TOP, EDSAL MODEL 600-72-M OR EQUAL
32. STANDON PIPE SUPPORT, SEE NOTE 2

NOTES:

1. FOR HVAC AND PLUMBING PLAN AND SCHEDULES, SEE SHEET M-4. FOR SITE PIPING SEE SHEET C-1.
2. SPECIAL HANGARS AND SUPPORTS ARE SHOWN IN SOME LOCATIONS. CONTRACTOR IS RESPONSIBLE FOR DETERMINING THE LOCATION AND NUMBER OF ALL ADDITIONAL SUPPORTS TO PROPERLY SUPPORT PIPING, VALVES AND EQUIPMENT CONNECTIONS TO PREVENT DEFLECTION AND STRESSES.
3. FOR ALL FLANGES NEAR WALL AND FLOOR PENETRATIONS FOR WHICH NO DIMENSION IS GIVEN, FLANGE FACE MUST BE 6" MINIMUM FROM WALL OR FLOOR.
4. MECHANICAL JOINT RESTRAIN REQUIRED ON ALL UNDERGROUND PIPE AND FITTINGS.

NO.	DATE	BY	REVISION

NOTICE: 0 ½ 1 — IF THIS BAR DOES NOT MEASURE 1" THEN DRAWING IS NOT TO SCALE

JDH DESIGNED
HCM DRAWN
BMG CHECKED

PRELIMINARY ONLY
DO NOT USE FOR CONSTRUCTION
JANUARY 2008
MURRAY, SMITH & ASSOCIATES, INC. Engineers/Planners

MSA Murray, Smith & Associates, Inc. Engineers/Planners
121 S.W. Salmon, Suite 900 Portland, Oregon 97204 PHONE 503-225-9010 FAX 503-225-9022

CITY OF TUALATIN

AQUIFER STORAGE AND RECOVERY WELL HOUSE

MECHANICAL FLOOR PLAN AND SECTIONS

PROJECT NO.: 00-0500.203 | SCALE: AS SHOWN | DATE: JANUARY 2008

SHEET M-1 X of X

S:\00\0500\203\CAD\00-0500-203-DR-M-1_3.dwg M-1 1/11/08 11:33 [EngCAD]

ASR Well Design Features

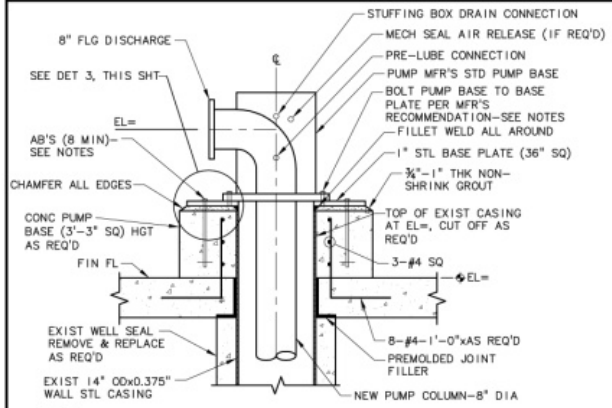

NOTES:

1. COMPLY WITH ALL REQUIREMENTS OF OREGON WATER RESOURCES DEPARTMENT FOR WORK ON EXISTING WELL.
2. FURNISH AND INSTALL BRASS OR COPPER FITTINGS, PIPING AND VALVING AS REQUIRED TO PROVIDE AIR RELEASE AND DRAIN. TYPICAL EACH PUMP.
3. ROUTE AIR RELEASE AND DRAIN PIPING TO TRENCH DRAIN. HOLD OUTLET PIPING 6-INCHES OFF FLOOR.
4. ANCHOR BOLTS TO BE 7/8" MINIMUM GALVANIZED STEEL WITH HEX NUTS (8 REQUIRED). LENGTH AND EMBED PER MANUFACTURER REQUIREMENTS.
5. PUMP BASE BOLTS TO BE HEX HEAD BOLTS WITH LOCK WASHER, LENGTH AS REQUIRED.
6. WELL VENT AND WELL ACCESS PORTS NOT SHOWN FOR CLARITY. SEE PLAN VIEW OF PUMP BASE, DETAIL 2 THIS SHEET.

DEEP WELL VERTICAL TURBINE PUMP BASE DETAIL (1 / M-1)
SCALE: 1"=1'-0"

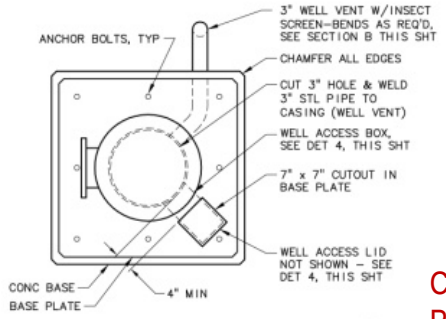

PLAN VIEW - PUMP BASE (2 / -)
SCALE: 1"=1'-0"

CASING ACCESS PORTS

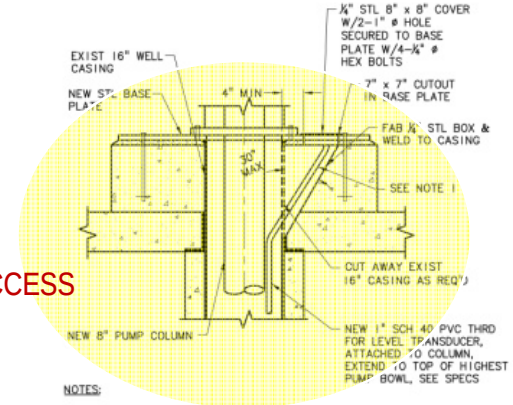

NOTES:

1. HEAT PVC AND FORM LONG RADIUS CURVES CAPABLE OF PASSING LEVEL TRANSMITTING AND LEVEL SENSING PROBES.
2. PROVIDE AND INSTALL 1" CAP ON SPARE HOLE IN COVER.
3. INSTALL GROMMET AND TRANSDUCER CABLE SUPPORT ON 1" HOLE IN COVER PER TRANSDUCER SUPPLIER REQUIREMENTS.
4. GRIND ALL INTERIOR EDGES OF ACCESS BOX, BASE PLATE OPENING AND COVER PLATE SMOOTH AND ROUND.

WELL ACCESS BOX (4 / -)
SCALE: NTS

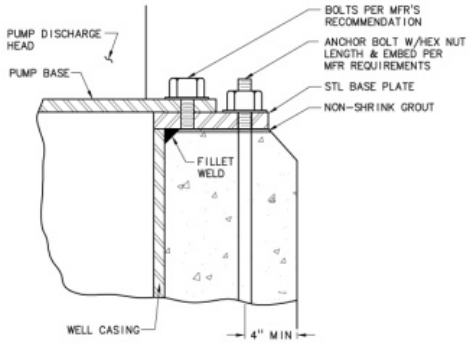

PUMP BARREL BASE (3 / -)
SCALE: NTS

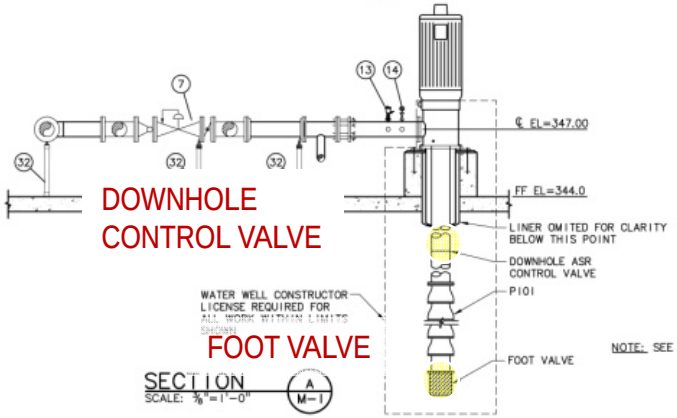

DOWNHOLE CONTROL VALVE

FOOT VALVE

SECTION (A / M-1)
SCALE: 3/8"=1'-0"

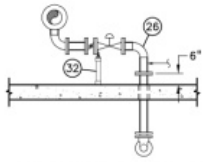

NOTE: SEE MECHANICAL SCHEDULE ON SHT M-1 FOR KEY NOTES.

SECTION (B / M-1)
SCALE: 3/8"=1'-0"

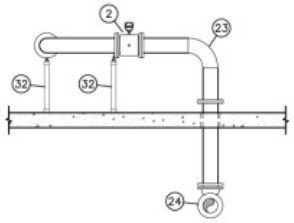

SECTION (C / M-1)
SCALE: 3/8"=1'-0"

NO.	DATE	BY	REVISION

NOTICE: 0 1/2 1 — IF THIS BAR DOES NOT MEASURE 1" THEN DRAWING IS NOT TO SCALE

JDH DESIGNED
HCM DRAWN
BMG CHECKED

PRELIMINARY ONLY — DO NOT USE FOR CONSTRUCTION
JANUARY 2008
MURRAY, SMITH & ASSOCIATES, INC. Engineers/Planners

MSA Murray, Smith & Associates, Inc. Engineers/Planners
121 S.W. Salmon, Suite 900 Portland, Oregon 97204 PHONE 503-225-9010 FAX 503-225-9022

CITY OF TUALATIN

AQUIFER STORAGE AND RECOVERY WELL HOUSE

MECHANICAL SECTIONS AND DETAILS

PROJECT NO.: 00-0500.203 | SCALE: AS SHOWN | DATE: JANUARY 2008

SHEET M-2 X of X

C:\00\0500\203\CAD\00-0500-203-OR-M-1_3.dwg M-2 1/11/08 11:33 (EngCAD)

Downhole Control Valves

DOWNHOLE ASR CONTROL VALVES

- Two primary types
- Three manufacturers
- Same basic functionality
  - "in-hole" flow control
  - cascading flow/air entrainment prevention
  - non-cavitating

"BASKI" TYPE VALVE

- Operation - pneumatic
- Flow Control - via rubber bladder
- Cavitation Control – roughness
- Fail Position - open

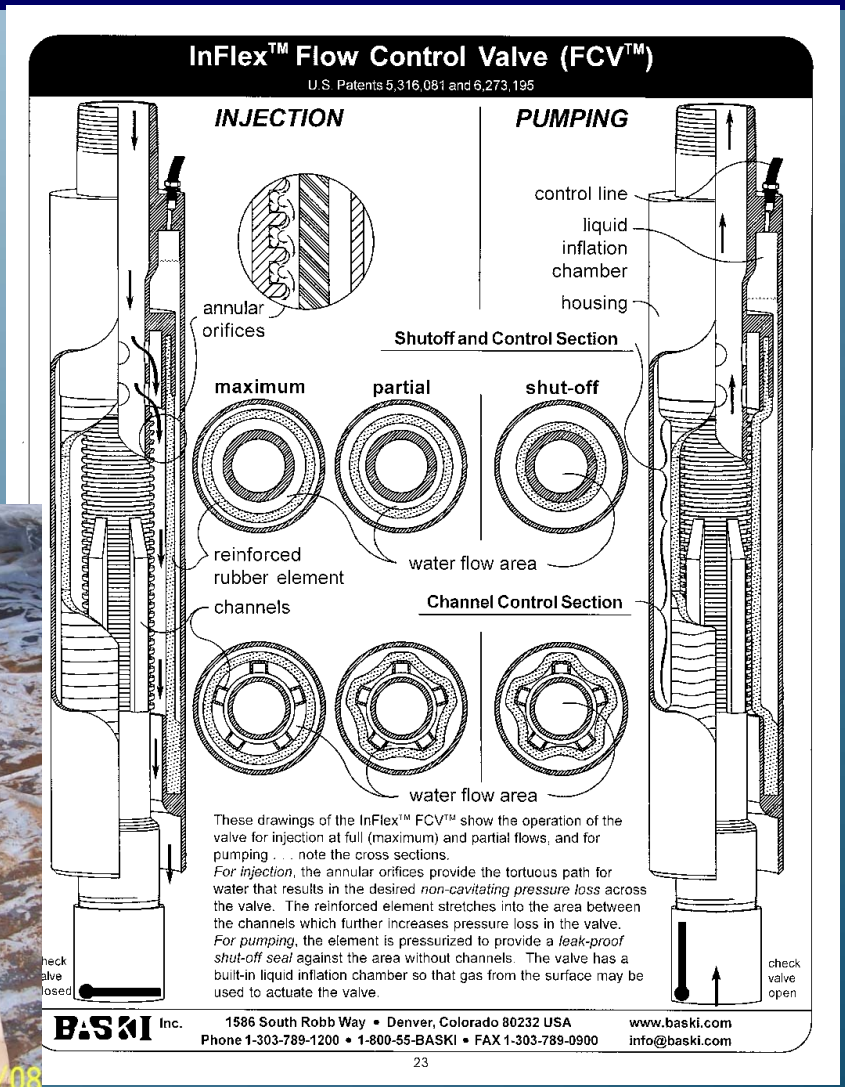

MSA

pnws · awwa WATER WORKS conference 2010 · May 12-14 tacoma

Downhole Control Valves

ORIFICE TYPE VALVE

- Operation - hydraulic
- Flow Control - sliding sleeve
- Cavitation Control – orifices
- Fail Position – Last position
- Two manufactures – sleeve orientation

3R DOWNHOLE VALVE

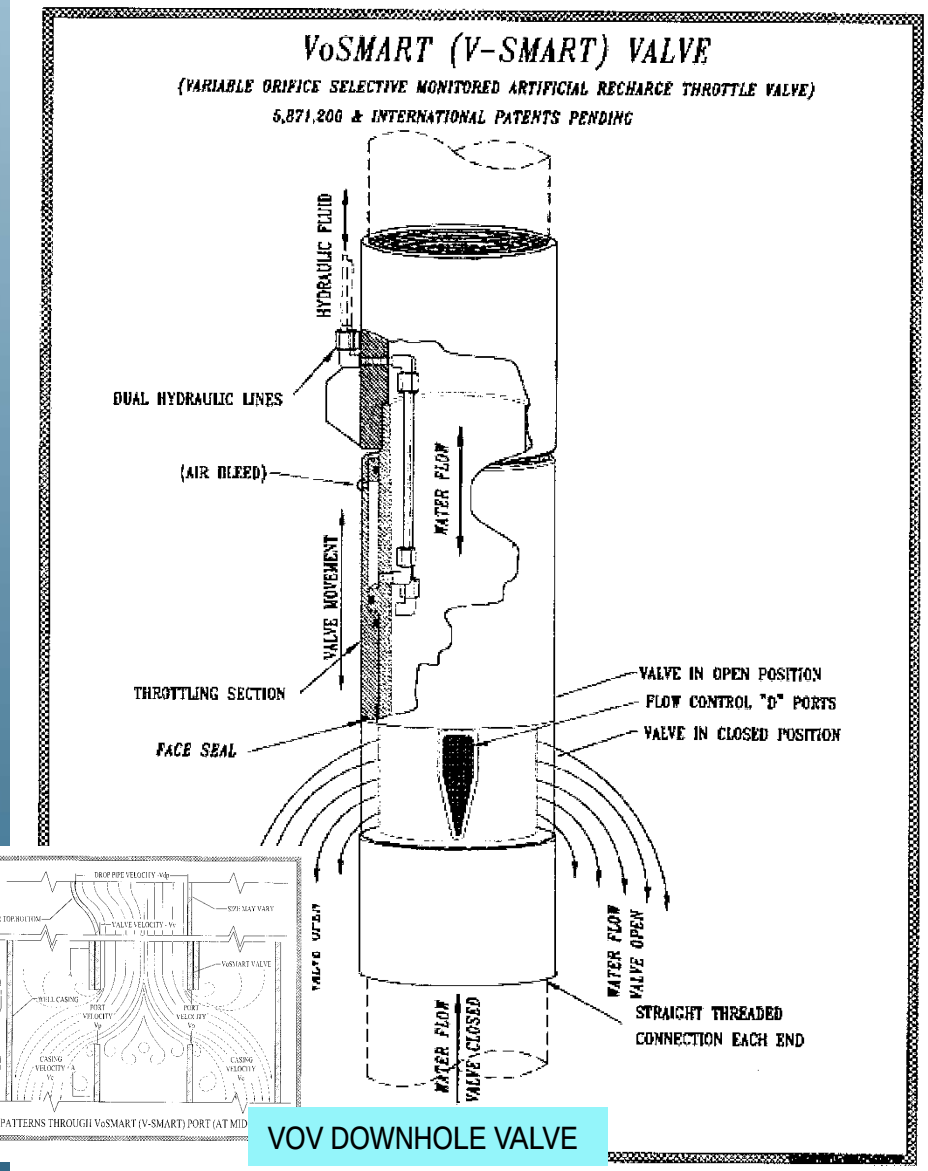

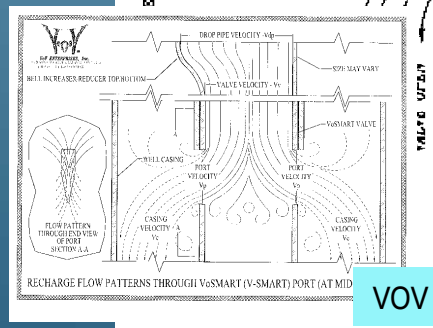

VOV DOWNHOLE VALVE

Project Construction

TWO-WAY FLOW METER

AIR RELIEF VALVE

MSA

pnws • awwa WATER WORKS conference 2010 • May 12-14 tacoma

Project Construction

PUMP BOWLS AND FOOT VALVE

DOWNHOLE CONTROL VALVE

MSA

pnws · awwa WATER WORKS conference 2010 · May 12-14 tacoma

Project Construction

DOWNHOLE CONTROL VALVE FITTED OVER LINE SHAFT

LINE SHAFT SPIDERS AT TOP OF DOWNHOLE VALVE

MSA

pnws • awwa WATER WORKS conference 2010 • May 12-14 tacoma

Project Construction

MSA

pnws · awwa WATER WORKS conference 2010 · May 12-14 tacoma

Project Construction

DOWNHOLE VALVE CONTROL PANEL

WELLHEAD ACCESS/CONTROL LINE AND MONITORING PORTS

ONSITE CHLORINE GENERATION

WATER QUALITY MONITORING/CONTROL PANEL

ONSITE DECHLORINATION

MSA

pnws • awwa WATER WORKS conference 2010 • May 12-14 tacoma

Project Construction

DECHLORINATED PUMP TO WASTE

WATER QUALITY/RETENTION SWALE

MSA

pnws • awwa WATER WORKS conference 2010 • May 12-14 tacoma

Conclusion

- Engineering/Design Element is one of many parts of successful ASR programs
- Planning and studies are essential
  - Hydrogeologic setting
  - Legal/water rights/permitting
  - System planning/engineering/design
- Expect and understand risks
- Specialized engineering/design approaches and features are needed
- Successful ASR programs rely on the success of many disciplines

MSA

pnws · awwa WATER WORKS conference 2010 · May 12-14 tacoma

Question and Answer Forum