HOW TO FIT MORE HORSES IN YOUR STABLE WITHOUT BUILDING A BIGGER BARN

Presented by: Jim Helton, P.E. and Jeff Jones, P.E.
Murray, Smith & Associates, Inc.

HOW TO FIT MORE HORSES IN YOUR STABLE WITHOUT BUILDING A BIGGER BARN

Benefits and Challenges in Upgrading Pump Stations Within Existing Building Envelopes and Site Footprints

MSA

WHEN TO CONSIDER UPGRADING EXISTING PUMP STATION FACILITIES

TIME FOR PUMP STATION UPGRADES WHEN:

- ❑ **Pumping Capacity of Existing Pump Station Unable to Keep up With Growing System Demands;**
- ❑ **Original Pumps, Electrical System and Other Pumping Equipment Becomes Outdated, Inefficient, and Requires High Maintenance; and**
- ❑ **Pump Station Building Requires a Large Amount of Maintenance and Repairs, Has Become an "Eyesore" to Nearby Residences**

REUSE OF EXISTING FACILITIES IS DESIRABLE WHEN:

- ❑ **The Existing Pump Station is Located in Established Neighborhoods with Little Opportunity to Relocate without Major Public Impacts and Costs;**
- ❑ **Existing Pump Station Building is Found to be Structural Sound; and**
- ❑ **Being "Green and Sustainable" is Desirable; Reuse of Existing Facilities is Good PR for the Owner**

MSA

BENEFITS IN UPGRADING EXISTING PUMP STATIONS

- **Minimizing or Potentially Eliminating Planning Review**

- **Minimizing Overall Permit Requirements**
  - Typical Minimum Building Permits Required for Pump Station Remodel: Electrical, Mechanical (HVAC)
  - Potential Other Building Permits Required: Plumbing, Structural
  - Potential Permits Related to Site Improvements: Right-of-Way Permits, Easements

- **Environmental Benefits by Reuse of Existing Building and Other Components**
  - Reducing Amount of Demolition that Would Otherwise Contribute to the Waste Stream
  - Reducing Greenhouse Gases by Minimizing Recycling and Manufacturing

- **Provide Opportunity to Improve Existing Building Architectural Features (May Trigger Some Planning Review Requirements)**

- **Overall Project Cost Savings Related to Many of the Above Listed Benefits and Particularly By Eliminating the Need for Property Acquisition**

MSA

CHALLENGES IN PUMP STATION DESIGN UTILIZING EXISTING FACILITIES

In determining if pump station improvements are possible within existing pump station structure and site envelope, the following design issues need to be evaluated:

❑**Space Limitations Due to Existing Building and Site Constraints**
•NEC Clearance and Egress Requirements for Electrical Panels
•Adequate and Safe Access Around Larger Pumping, Plant Piping, Ventilation and Mechanical Equipment

❑**Extent of Existing Plant and Yard Piping Improvements Required Due to Increased Pumping Capacities and Pressures**

❑**Heating and Ventilation Improvements Required Due to Larger Pump Motors and Motor Control Equipment**

❑**Staged Pump Replacement Work such that Pump Station is Operational During all Phases of Construction**

❑**Evaluate Existing Building to Determine if Structural Sound for Wall Cutouts and Other Building Structure Improvements**

MSA

THREE EXAMPLES OF EXISTING PUMP STATION IMPROVEMENT PROJECTS

Three Pump Station Examples are presented and are similar in that they are: Housed in Reinforced Masonry Buildings (SCR Brick), Originally Constructed in the 1960's, and Pump Water from Adjacent Reservoirs to Higher Level Reservoirs through a Distribution System

- **Waluga Pump Station Modifications and Improvements ("Schedule 1" of the Water Pump Stations Modifications and Improvements Project, City of Lake Oswego, 2007)**

- **Kerr Road Pump Station Modifications and Improvements ("Schedule 2" of the Water Pump Stations Modifications and Improvements Project, City of Lake Oswego, 2007)**

- **Valley View Pump Station Modifications and Improvements, Oak Lodge Water District, 2009**

MSA

WALUGA PUMP STATION MODIFICATIONS AND IMPROVEMENTS, CITY OF LAKE OSWEGO

Objectives: Increase firm pumping capacity from 3,000 gpm to 6,000 gpm with high efficiency pumps, provide improved emergency power system.

Key Design Elements

- Replace two 1,500 gpm pumps with two 3,000 gpm, 250 hp pumps
- Complete hydraulic analysis to verify that distribution system can handle increased firm pumping capacity
- Excavate pump station floor to remove and replace suction header and pump cans
- Provide temporary backup pumping during construction
- Increase ventilation capacity
- Relocate surge and pressure relief valving and piping from inside building to new CMU walled in area
- Upgrade electrical service

WALUGA PUMP STATION MODIFICATIONS AND IMPROVEMENTS, CITY OF LAKE OSWEGO

Replace Pumps 1 & 2, Existing 200 hp
3,000 gpm Pump 3 to Remain

Existing Pumps 1 & 2

Existing Pump 3

WALUGA PUMP STATION MODIFICATIONS AND IMPROVEMENTS, CITY OF LAKE OSWEGO

Existing Surge and Pressure Relief Valves and Piping Clearance Constraints

MSA

CITY OF LAKE OSWEGO OREGON

WALUGA PUMP STATION MODIFICATIONS AND IMPROVEMENTS, CITY OF LAKE OSWEGO

Demolition Plan Showing Floor Excavations

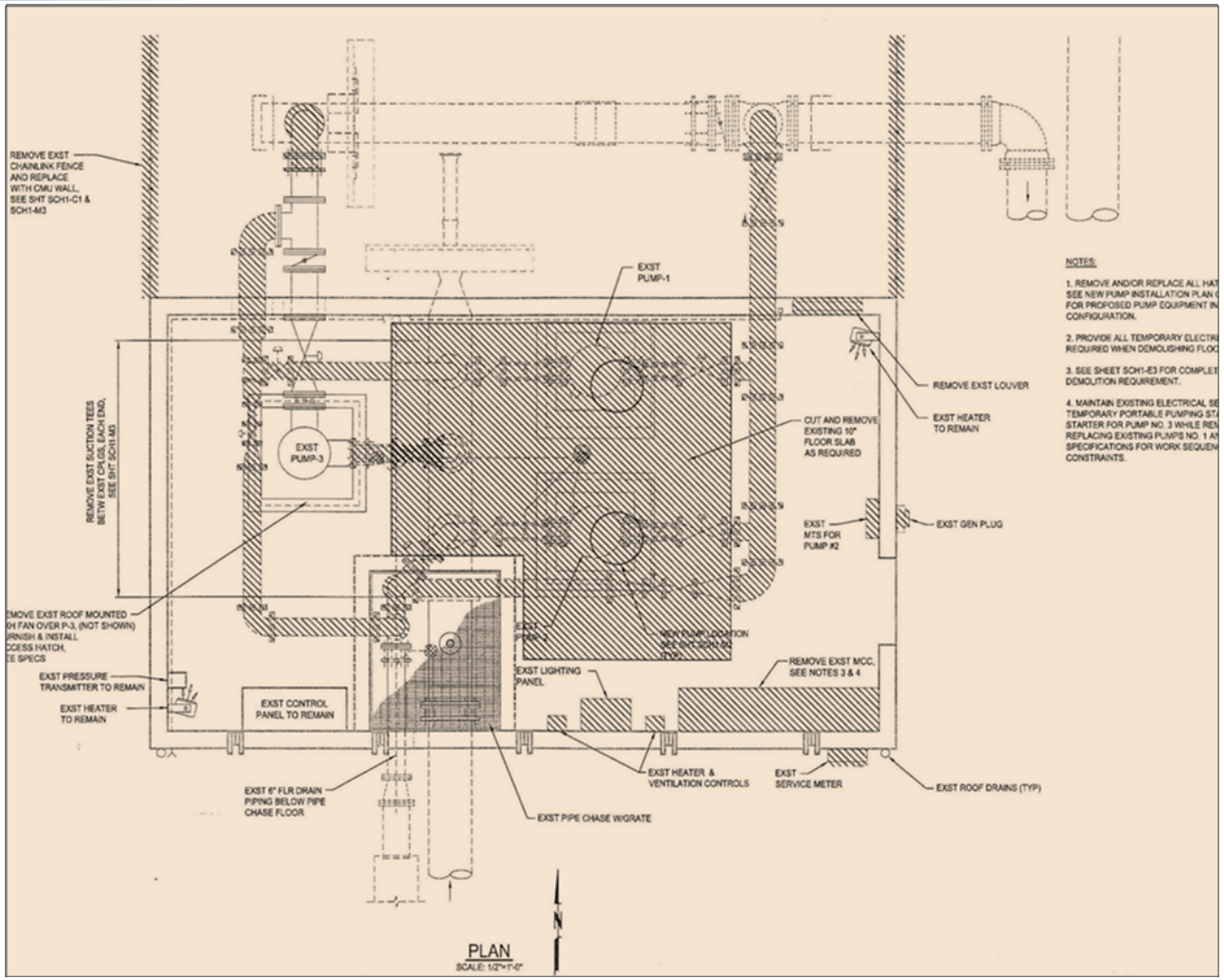

WALUGA PUMP STATION MODIFICATIONS AND IMPROVEMENTS, CITY OF LAKE OSWEGO

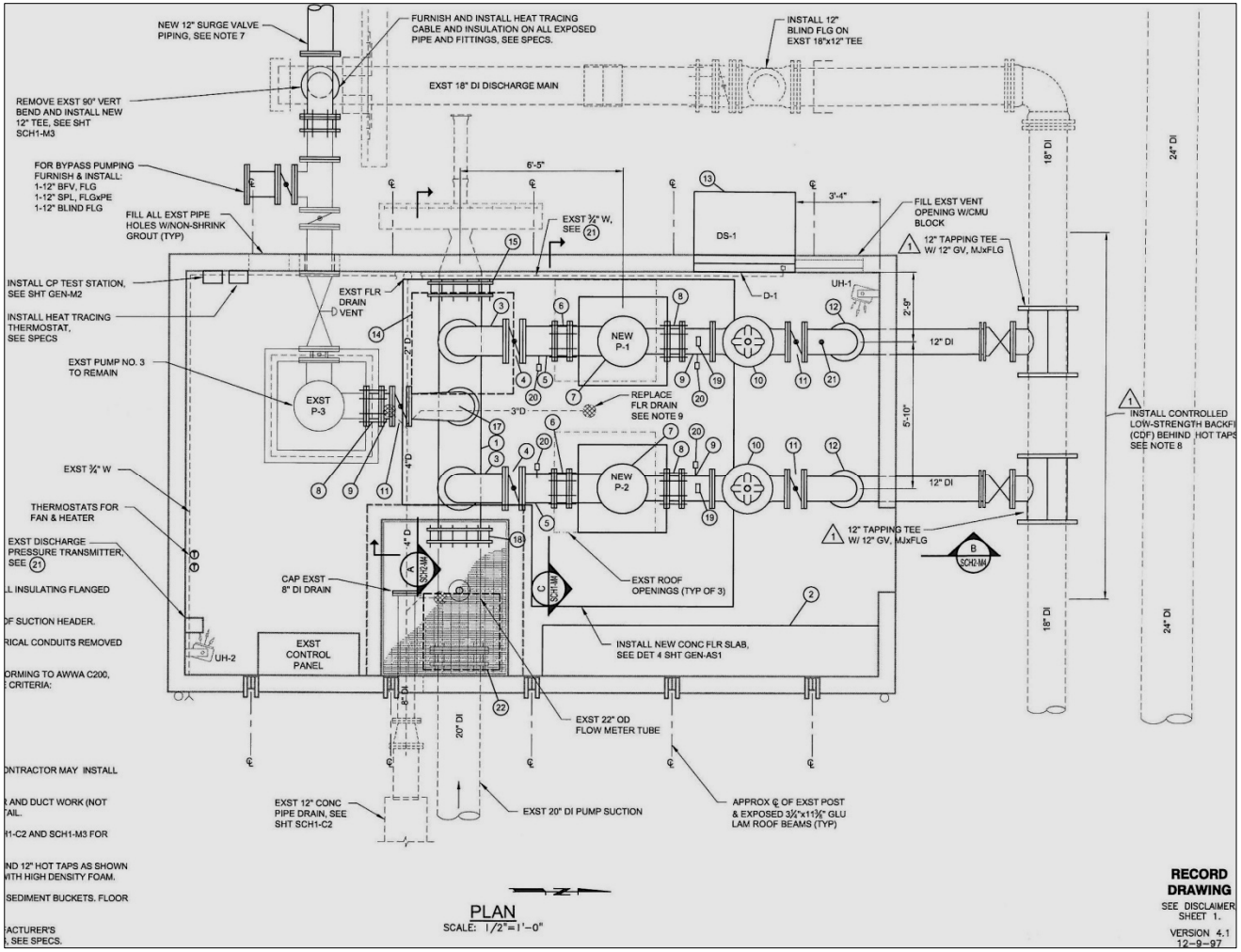

New Mechanical Layout

WALUGA PUMP STATION MODIFICATIONS AND IMPROVEMENTS, CITY OF LAKE OSWEGO

Yard Piping Improvements Behind Pump Station with Relocated Surge and Pressure Relief Valving

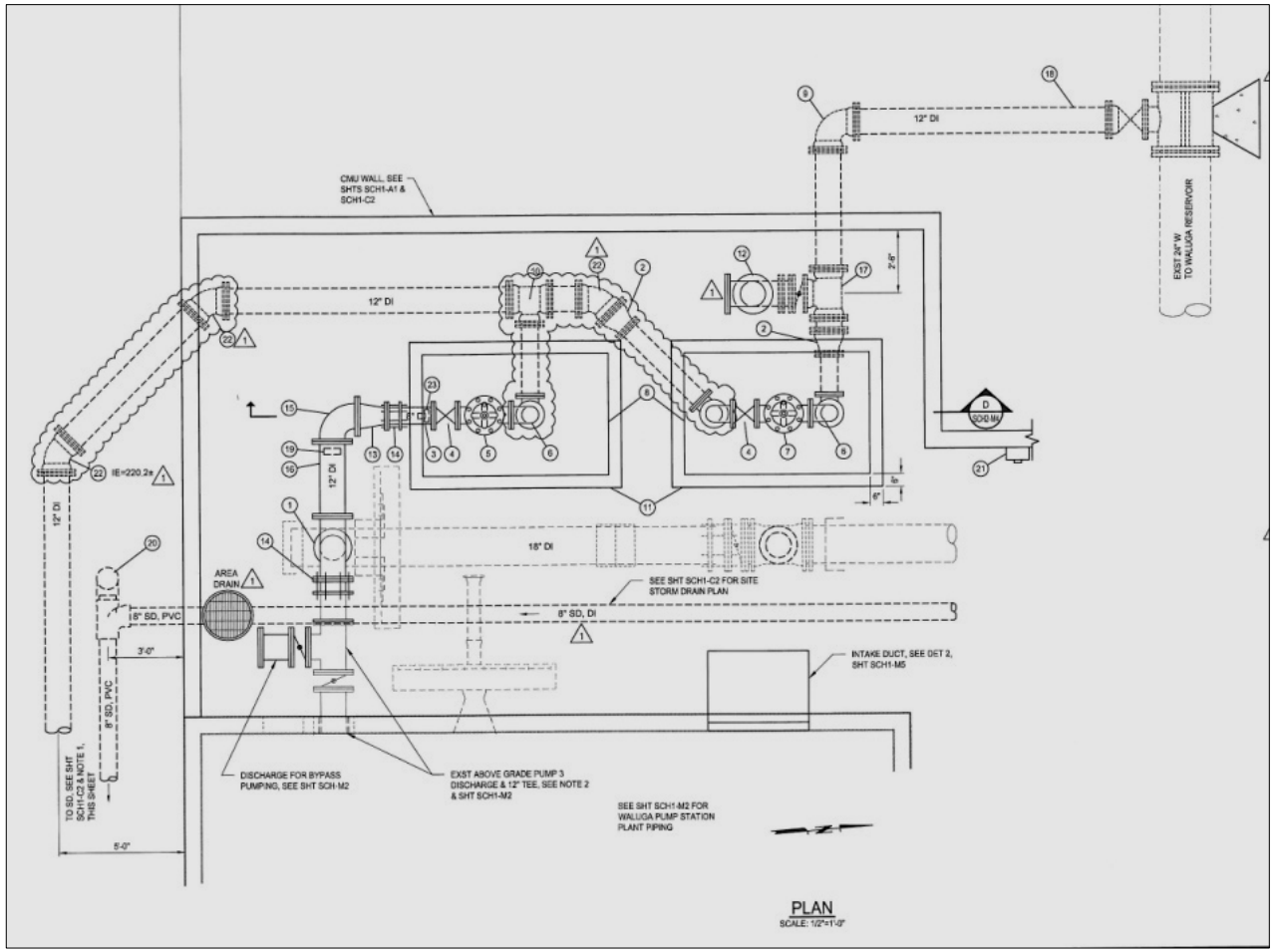

WALUGA PUMP STATION MODIFICATIONS AND IMPROVEMENTS, CITY OF LAKE OSWEGO

Floor Excavated to Replace Suction Header and Pump Cans

WALUGA PUMP STATION MODIFICATIONS AND IMPROVEMENTS, CITY OF LAKE OSWEGO

Temporary Electrical Service and Backup Pumping

WALUGA PUMP STATION MODIFICATIONS AND IMPROVEMENTS, CITY OF LAKE OSWEGO

CMU Wall Under Construction

In Order to Provide Space in Pump Station, Surge and Pressure Relief Valving Relocated Outside,
SS Ventilation Intake Duct With Silencer Located Outside

WALUGA PUMP STATION MODIFICATIONS AND IMPROVEMENTS, CITY OF LAKE OSWEGO

Completed CMU Wall and Outside Equipment Installation

WALUGA PUMP STATION MODIFICATIONS AND IMPROVEMENTS, CITY OF LAKE OSWEGO

Completed Pumps No. 1 & 2

WALUGA PUMP STATION MODIFICATIONS AND IMPROVEMENTS, CITY OF LAKE OSWEGO

Before

After

KERR ROAD PUMP STATION MODIFICATIONS AND IMPROVEMENTS, CITY OF LAKE OSWEGO

Project Main Objectives: Increase firm capacity from 1,500 gpm to 3,000 gpm with high efficiency pumps, provide corrosion protection system

Key Design Elements

- Replace three pumps ranging from 750 gpm to 1,000 gpm with three 1,500 gpm pumps
- VFD's motor control system installed to control localized high pressures within distribution system caused by increased pumping capacity
- Cathodic Protection System with Impressed current and anode wells
- Pumps installed in stages, one at a time
- Improve ventilation

KERR ROAD PUMP STATION MODIFICATIONS AND IMPROVEMENTS, CITY OF LAKE OSWEGO

Replace 50 HP Pumps 1 & 2 and 75 HP Pump 3 with Three 1,500 gpm 150 HP Pumps. Reuse Pump 3 Pump Can, Remove Pumps 1 & 2 Pump Can from Existing Concrete Pipe Sleeves cast in floor and Replace With Larger Cans

KERR ROAD PUMP STATION MODIFICATIONS AND IMPROVEMENTS, CITY OF LAKE OSWEGO

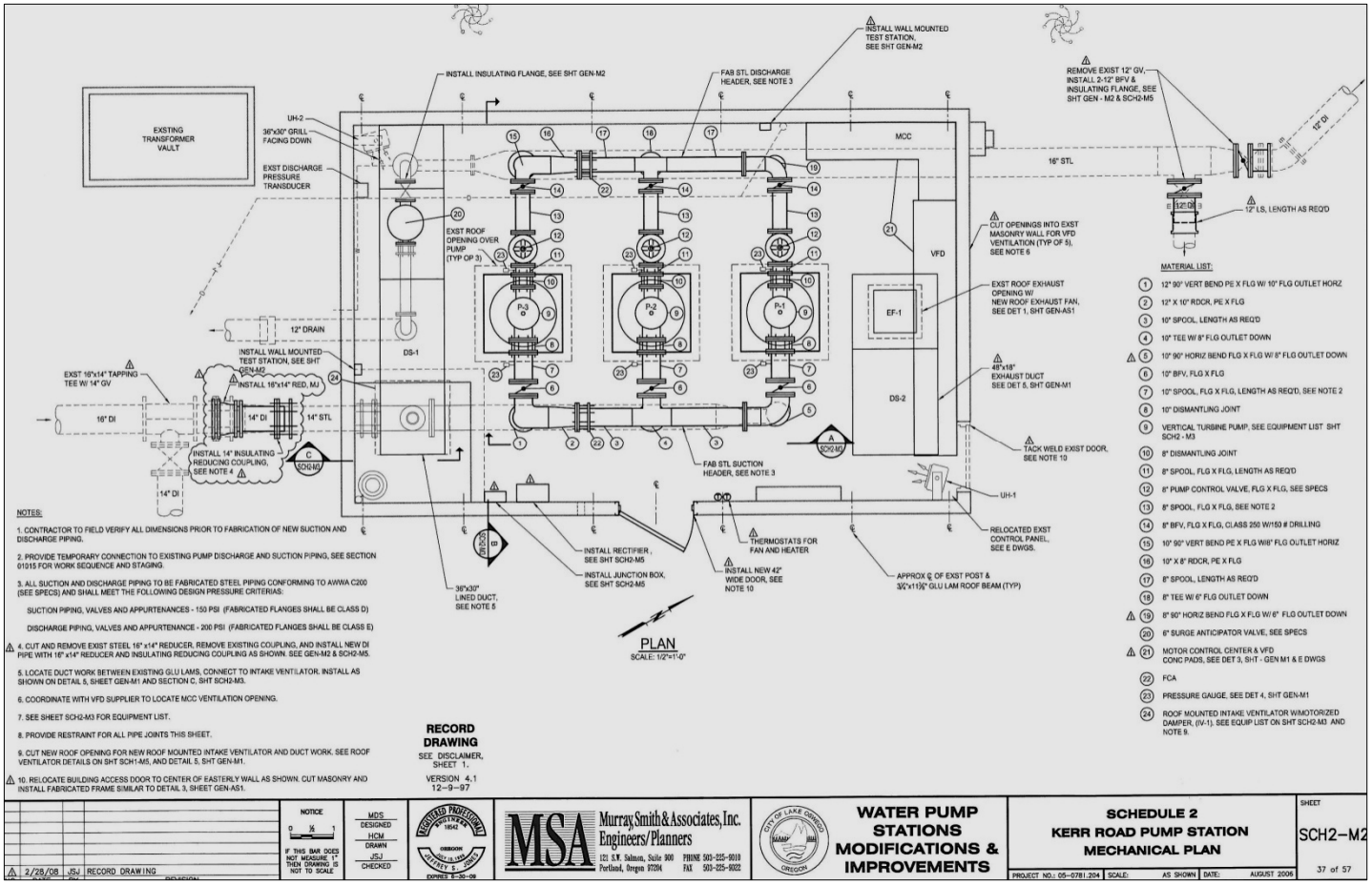

New Mechanical Upgrades

KERR ROAD PUMP STATION MODIFICATIONS AND IMPROVEMENTS, CITY OF LAKE OSWEGO

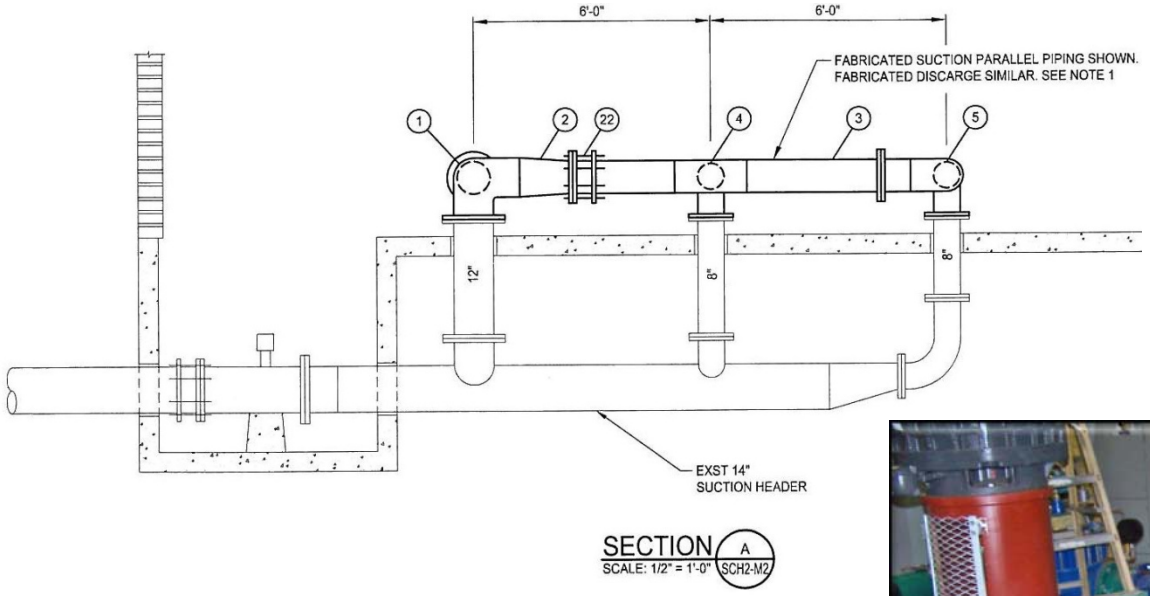

Installed Parallel Suction and Discharge Plant Piping to Improve Hydraulics and Avoid Floor Excavation

KERR ROAD PUMP STATION MODIFICATIONS AND IMPROVEMENTS, CITY OF LAKE OSWEGO

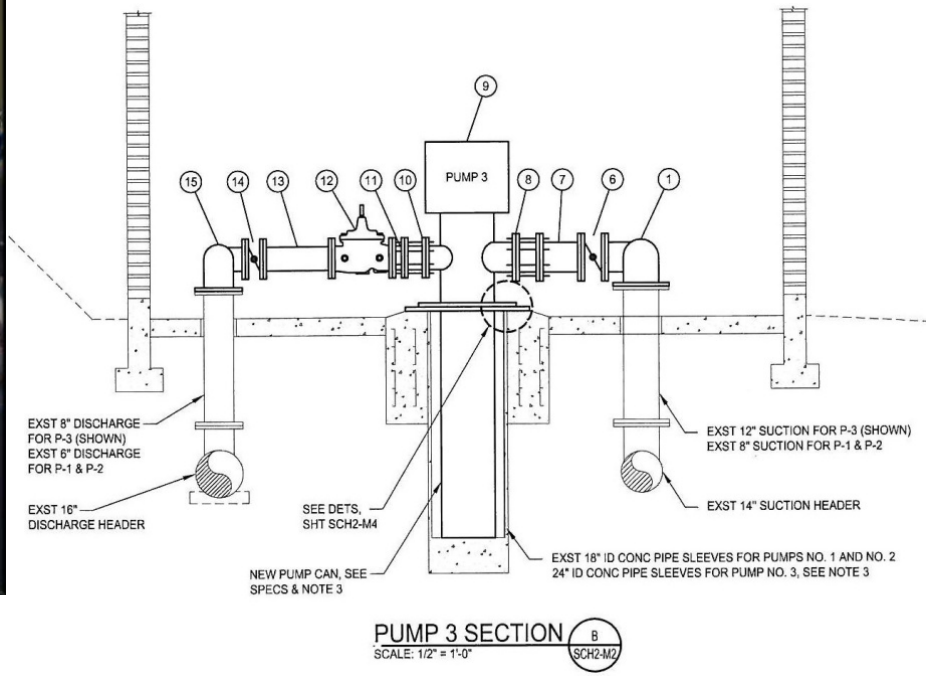

Installing New Pump Cans and Pumps in Stages

KERR ROAD PUMP STATION MODIFICATIONS AND IMPROVEMENTS, CITY OF LAKE OSWEGO

Fitting and Providing Ventilation for VFD's and New Electrical Equipment with Limited Space Created Challenges During Design and Construction

VALLEY VIEW PUMP STATION MODIFICATIONS AND IMPROVEMENTS, OAK LODGE WATER DISTRICT

Project Main Objectives: Replace four dissimilar pumps at 1,600 gpm firm capacity with three identical 1,000 gpm high efficiency pumps for a 2,000 gpm firm capacity and room for future fourth pump, replace flat roof with pitched roof, and improve pump mechanical equipment access

Key Design Elements

- Redo pump and control valve layout to improve pump equipment access
- Metal grate floor over lower level
- Utilized GPR to verify existing wall reinforcement placement to confirm if walls can support new pitched roof
- Staged construction sequence to minimize pump shutdowns
- Improve ventilation without cutting openings in walls

VALLEY VIEW PUMP STATION MODIFICATIONS AND IMPROVEMENTS, OAK LODGE WATER DISTRICT

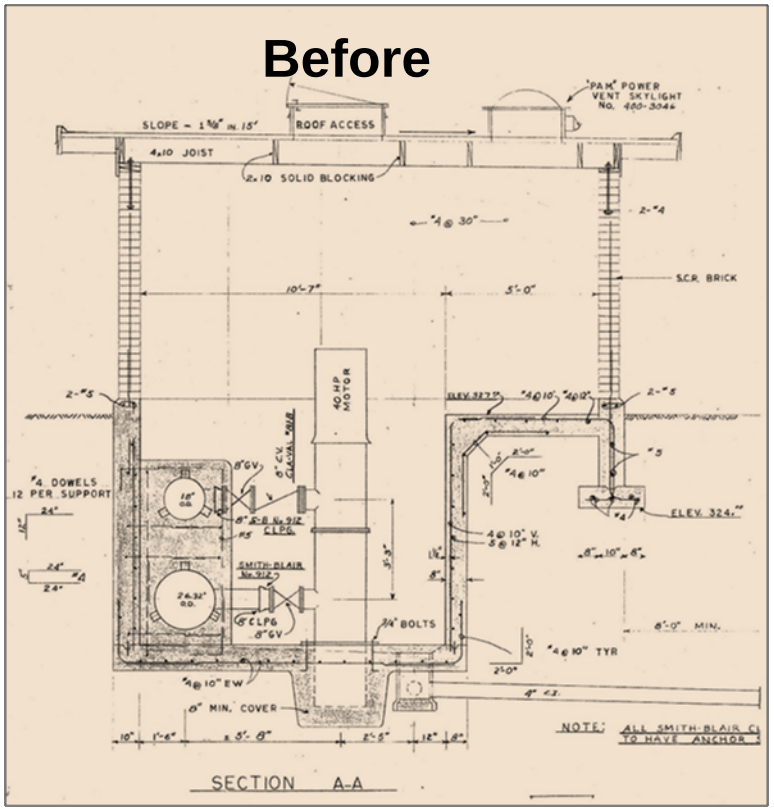

Improving Existing Pump Equipment Layout

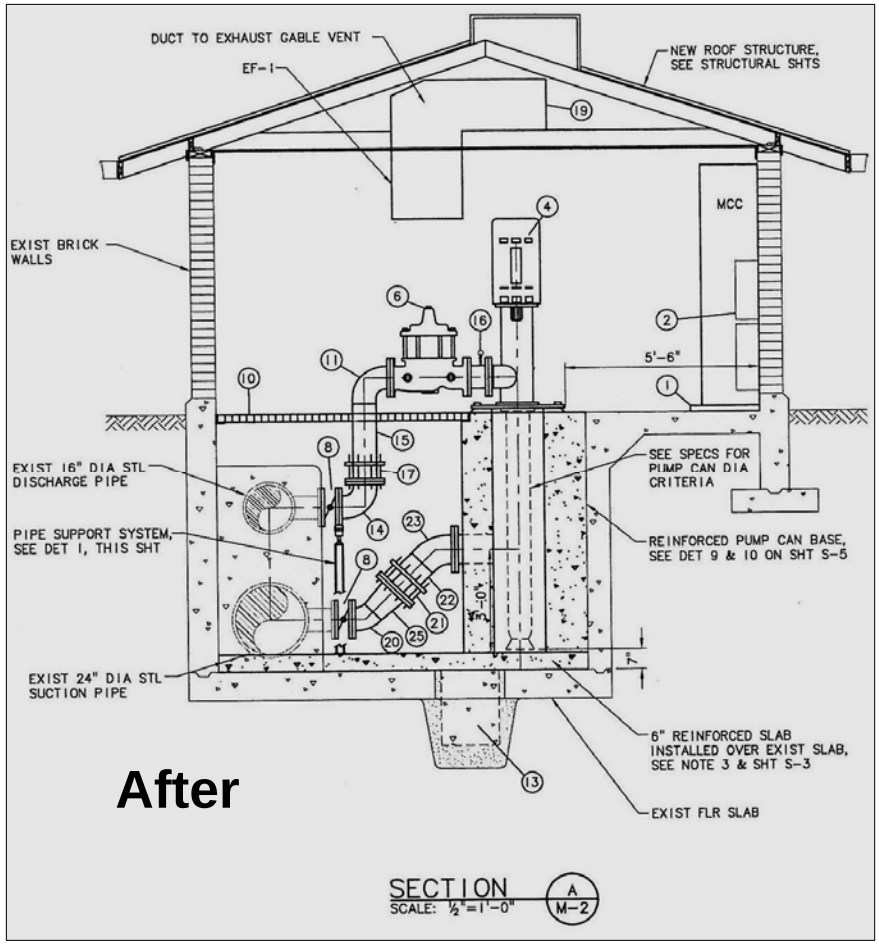

VALLEY VIEW PUMP STATION MODIFICATIONS AND IMPROVEMENTS, OAK LODGE WATER DISTRICT

Existing Pump Equipment Shown Located in Lower Level with Difficult Pump and Pump Control Valve Access

VALLEY VIEW PUMP STATION MODIFICATIONS AND IMPROVEMENTS, OAK LODGE WATER DISTRICT

New Improved Pump Layout and Grated Floor Providing Better Equipment Access

VALLEY VIEW PUMP STATION MODIFICATIONS AND IMPROVEMENTS, OAK LODGE WATER DISTRICT

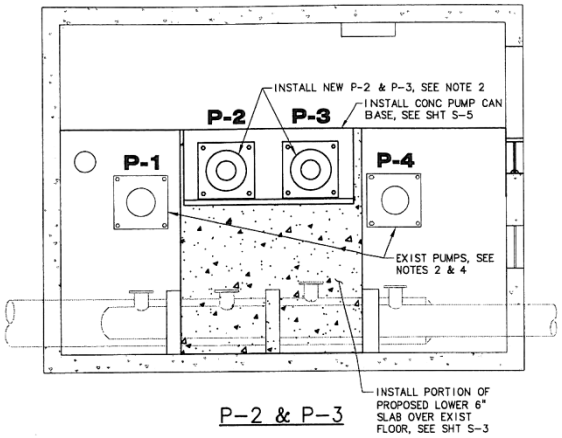

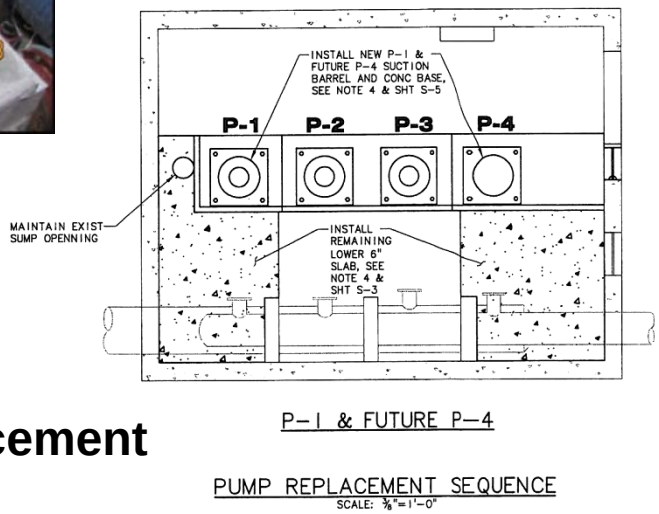

Staged Pump Replacement

VALLEY VIEW PUMP STATION MODIFICATIONS AND IMPROVEMENTS, OAK LODGE WATER DISTRICT

Before

After

How to Fit More Horses in Your Stable Without Building a Bigger Barn

Questions ?