Kennedy/Jenks Consultants

Engineers & Scientists

City of Bellevue Pump Station Upgrade Program: Newport Pump Station

Jeff Foray, P.E.

14 May 2010

pnws • awwa WATER WORKS conference 2010 • May 12-14 tacoma

Bellevue Water System Overview

- Serves About 134,000
- Supply from Cascade Water Alliance/Seattle
- MDD is 40mgd, 52mgd in 2040
- 10 Operating Zones
- 45 Pressure Zones
- 23 Water Booster Pump Stations
- 60% of Water is Pumped

2006 Water Booster Pump Station Condition Evaluation and Prioritization

- Multi-discipline field evaluation of all water booster stations
- Hydraulic evaluation
- Risk assessment
- List of recommended improvements
- Prioritized list of facilities

Evaluation Scoring Table Example

Criterion = Electrical Condition

7 scoring parameters in this criterion

Electrical Condition Evaluation

Location			Scoring							Possible		7
Operating Area	Operating Zone	Pump Station	Is electrical service and distribution more than 20 years old?	Is electrical service and distribution more than 30 years old?	Are there ongoing maintenance problems?	Does electrical installation meet current NEC requirements?	Does telemetry system meet current City standards?	Is electrical service 480 VAC?	Do pump motors above 20 hp have solid-state starters or VFD's?	Score	Scale 1 to 5	Round
West Bellevue	Pike's Peak	Pike's Peak			-1	-1				5	3.57	4
		NE 40th - 670								7	5.00	5
		Cherry Crest	-1							6	4.29	4
	Downtown	Meydenbauer				-1				6	4.29	4
		Clyde Hill	-1		-1	-1				4	2.86	3
	Woodridge	Woodridge								7	5.00	5
East Bellevue	Lake Hills North	NE 40th Reservoir				-1				6	4.29	4
		NE 8th	-1							6	4.2[illegible]	4
		Crossroads (Lake Hills)								7	[illegible]	5
	Lake Hills South	SE 28th	-1			[illegible]				5	[illegible]	4

Total score, out of 7 possible

Total score, rounded 1 to 5, lower numbers are worse

Pump Station Score Card

	Criteria	Condition Evaluation (from Field Survey)	Weight	Score
A	Pump Condition	5	.08	0.40
B	Mechanical Equipment Condition	5	.07	0.35
C	Electrical Equipment Condition	4	.09	0.56
D	Condition of Structure	5	.03	0.15
E	Condition of Site	3	.01	0.03
F	Current Pumping Capacity	4	.11	0.44
G	Pumping Redundancy	2	.13	0.26
H	Power Reliability	2	.11	0.22
I	Expansion and Upgrade Capability	3	.02	0.06
J	Water Quality Considerations	3	.13	0.39
K	Maintenace Capability	5	.04	0.20
L	Safety	4	.15	0.60
M	Vulnerability to Damage	2	.00	0.00

TOTAL 3.76

Normal Operating Ranking

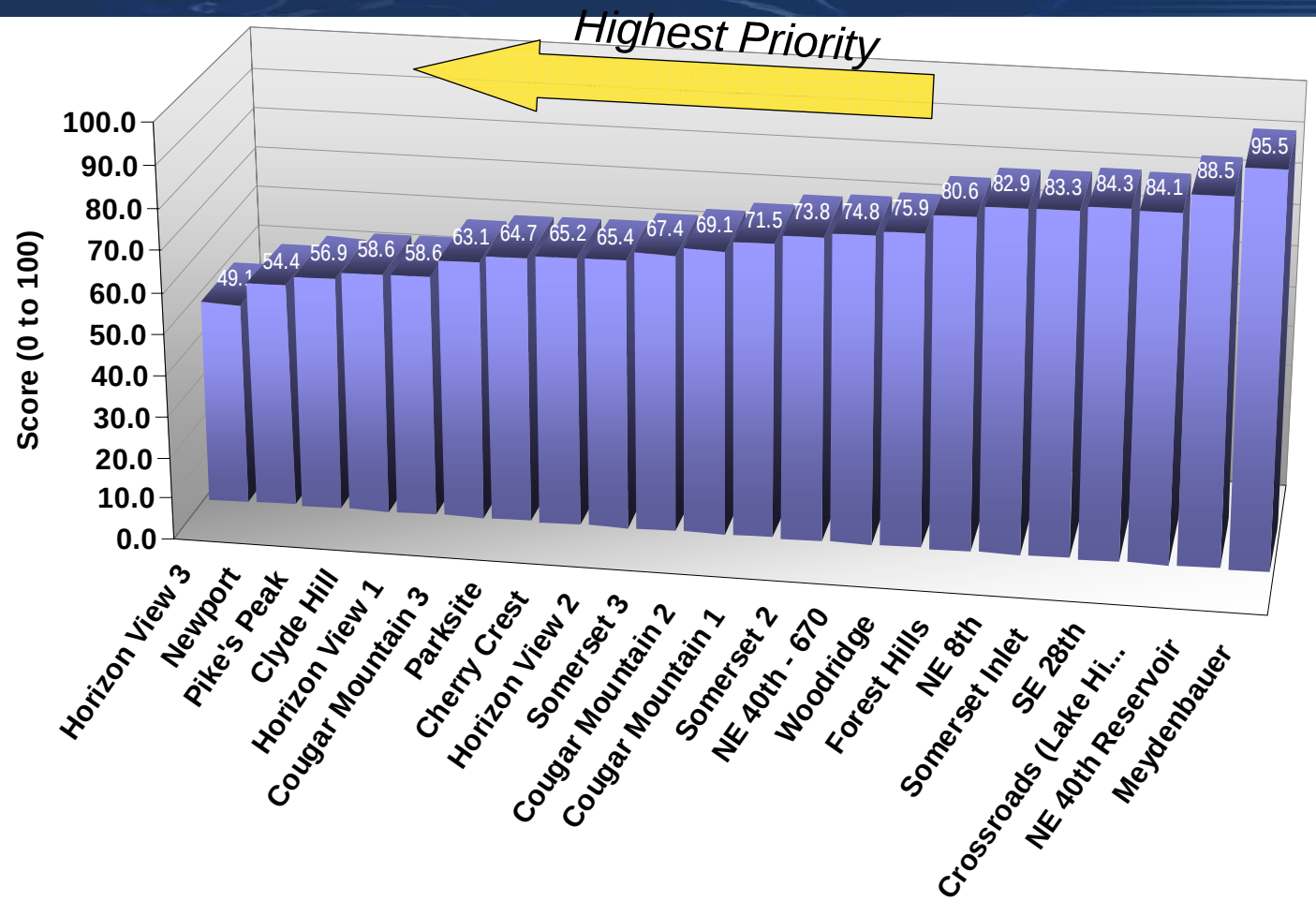

Emergency Operating Scenario

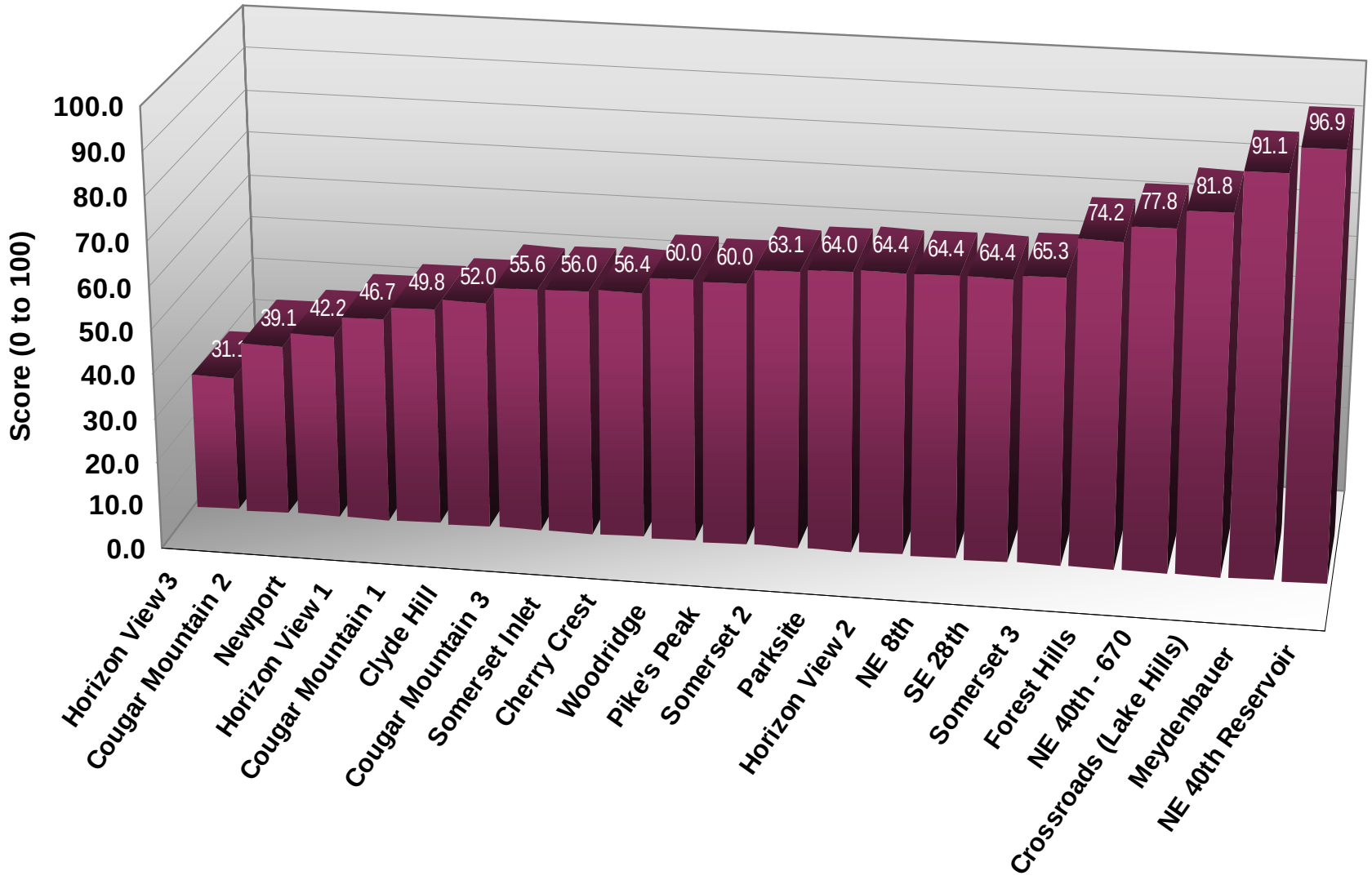

Combined Rankings

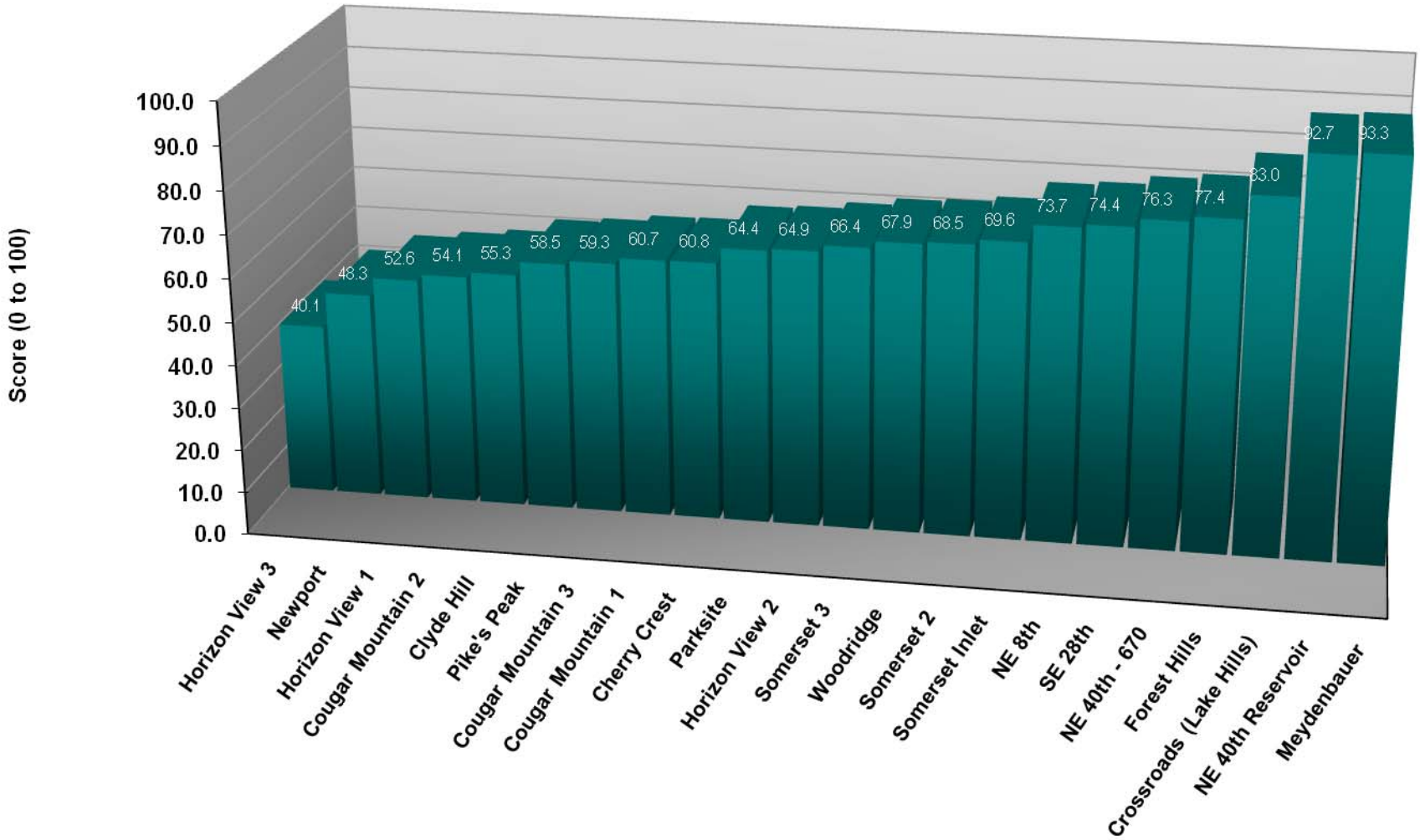

Bang for Your Buck Slide

Pump Station	Project Cost	Change in Score	Gal/Yr (Million)	Cost/Pt	Cost/Pt*MG
Horizon View 3	$ 905,000	30	15	$ 30,167	$ 2,011
Newport	$ 1,220,700	38	290	$ 32,124	$ 111
Horizon View 1	$ 2,773,000	32	313	$ 86,656	$ 277
Cougar Mountain 1	$ 650,000	21	200	$ 30,952	$ 155
Horizon View 2	$ 3,667,200	27	153	$ 135,822	$ 888
Woodridge	$ 455,000	12	1	$ 37,917	$ 37,917
NE 40th/670	$ 130,000	4	36	$ 32,500	$ 903
Pikes Peak	$ 2,900,000	39	1.5	$ 74,359	$ 49,573
Cherry Crest	$ 2,550,000	27	1.2	$ 94,444	$ 78,704

Newport Pump Station

- Pumps approximately 300,000,000 gallons/year
- Constructed in 1984, modified in 1991
- Pumps: 1 125 hp, 1 150 hp, 2 50 hp
- Pumps through two zones (520 to 850), provides high level of flexibility and redundancy

Newport Pump Station

- Pumps are fairly old (20 to 30 years), not optimized for current pumping conditions
- Pump No. 2 has been unreliable and is used infrequently
- Unreliable right-angle diesel engine drive on Pump No. 1
- Newport and several other pump stations receive power from Eastgate Substation
- Transformer located on street at end of steep downhill curve

Recommended Improvements

- 300 kW standby generator
- New process equipment (pumps, electrical)
- Roof hatches, misc.
- Cost estimate: $813K (bid), $1,220K (total)
- Estimate change in score for proposed improvement
  - As is: 48.3 (2nd lowest)
  - Add generator: 69.1
  - Rest of improvements: 86.1
  - Now the 3rd highest rated pump station

Pumping System

- Capacity: keep the same (2000 gpm) or try to get more
  - Existing system does not meet HI standards
  - Capacity increase would require additional changes
- Frequent dilemma: if it works now do you need to change it to meet new standards?
- Retrofit Lesson: be careful of things like “meet all standards”

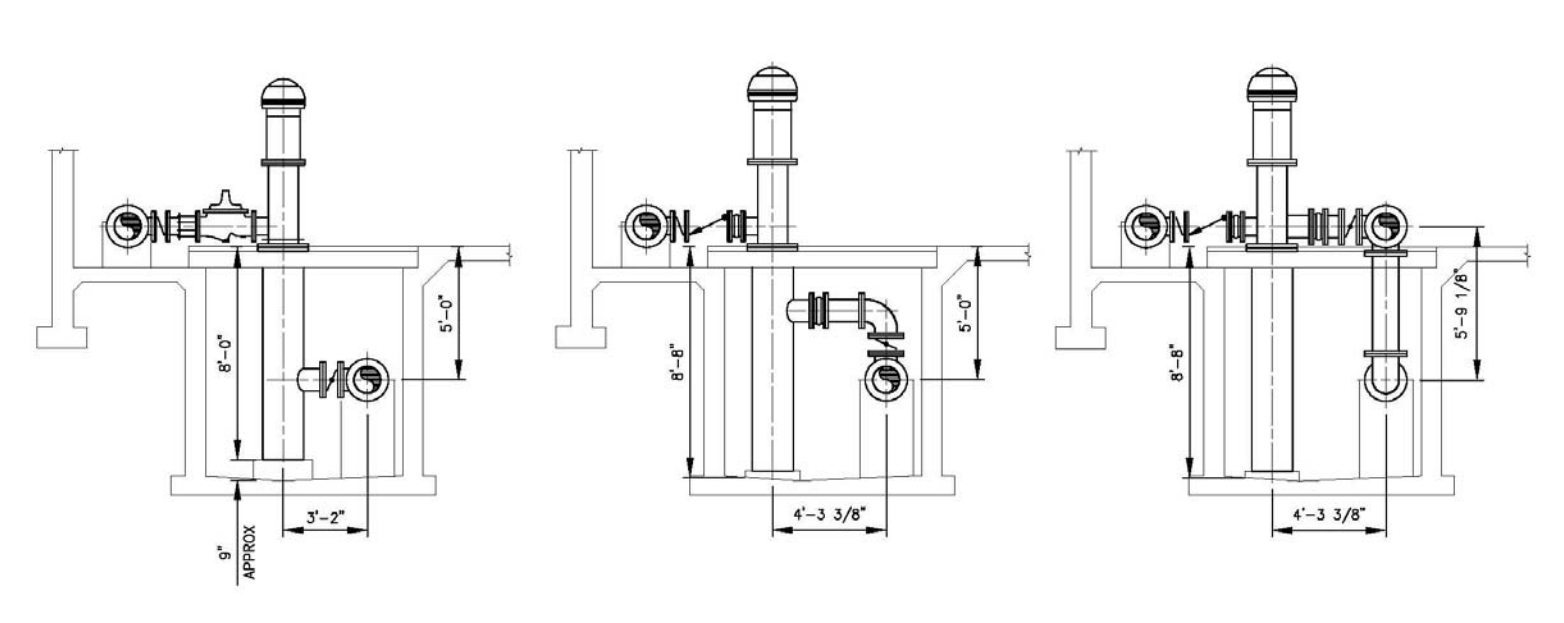

Pumping Related Topics

- Energy efficiency
  - Annual energy bill $35,000
  - Small pumps help match demand
  - VFD's could cost $100K, might save $5K a year
- Surge
  - Flow Science report: vapor cavities out in system
  - Surge tank or AVARS?
- Retrofit lessons:
  - look at total install and actual operations data when considering VFD's
  - Surge valves are OK but may not solve everything

Surge Analysis

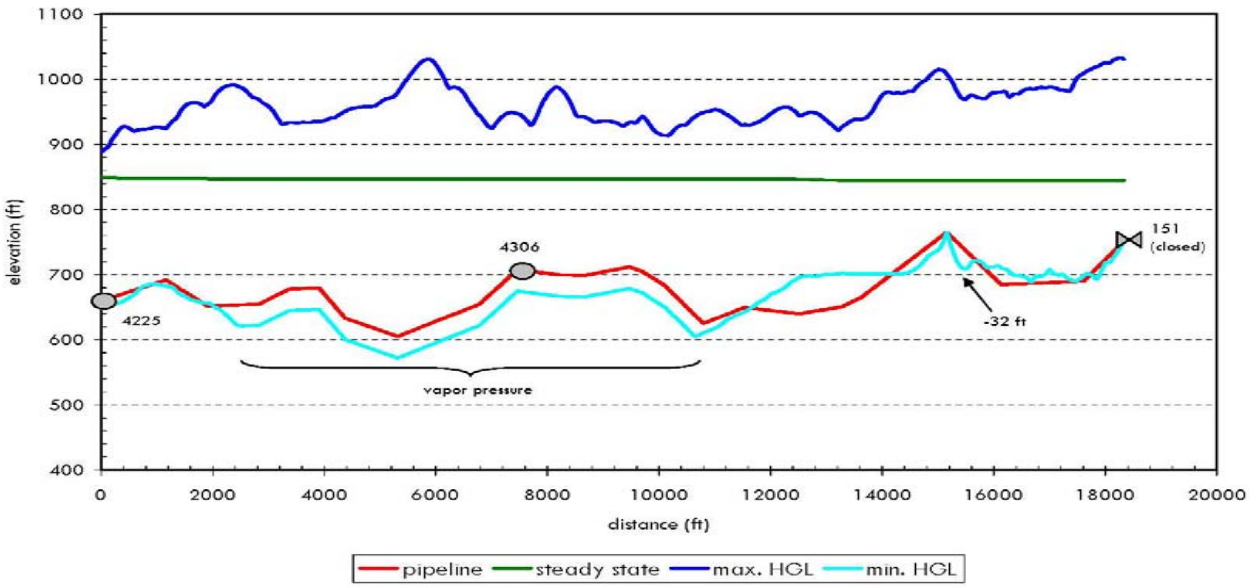

091099 December 29, 2009

FLOW SCIENCE

Electrical

- Existing service: 150 KVA Transformer
- Existing gear
  - Overheating breaker
  - Getting old, time to replace
- Standby power
  - 300 kW in enclosure
  - Space a concern: enclosure options
- Retrofit lesson: start early with utility

Structural/Architectural/Site

- Add roof hatches for pump access
- Permit – King County
  - Less than $200,000 in permitted improvements
  - 8 months
  - $15,000
  - Similar project in Everett: less than a month, $2,000
- Site: new secondary gate, roof access
- Retrofit lesson: know your permit agency

Questions?

JeffForay@KennedyJenks.com

RonBard@KennedyJenks.com