FUNDAMENTALS OF

ELECTRIC ACTUATOR CONTROL

Presented By:

Bob Halgren of **Specialty Controls Inc**

Specialty Controls Inc
PO Box 1630
Duvall, WA 98019
425-844-6412

Motor Controls

Every motor requires controls:

Pumps & Fans:

- On/Off
- Continuous Operation
- Operates in One Direction

Electric Valve Actuator:

- Operates in Both Directions O/C
- Torque Output
- Motor Protection
- Local Controls
- Motor Control Designs

Specialty Controls Inc
PO Box 1630
Duvall, WA 98019
425-844-6412

Controlling the Motor

Reversing Starter

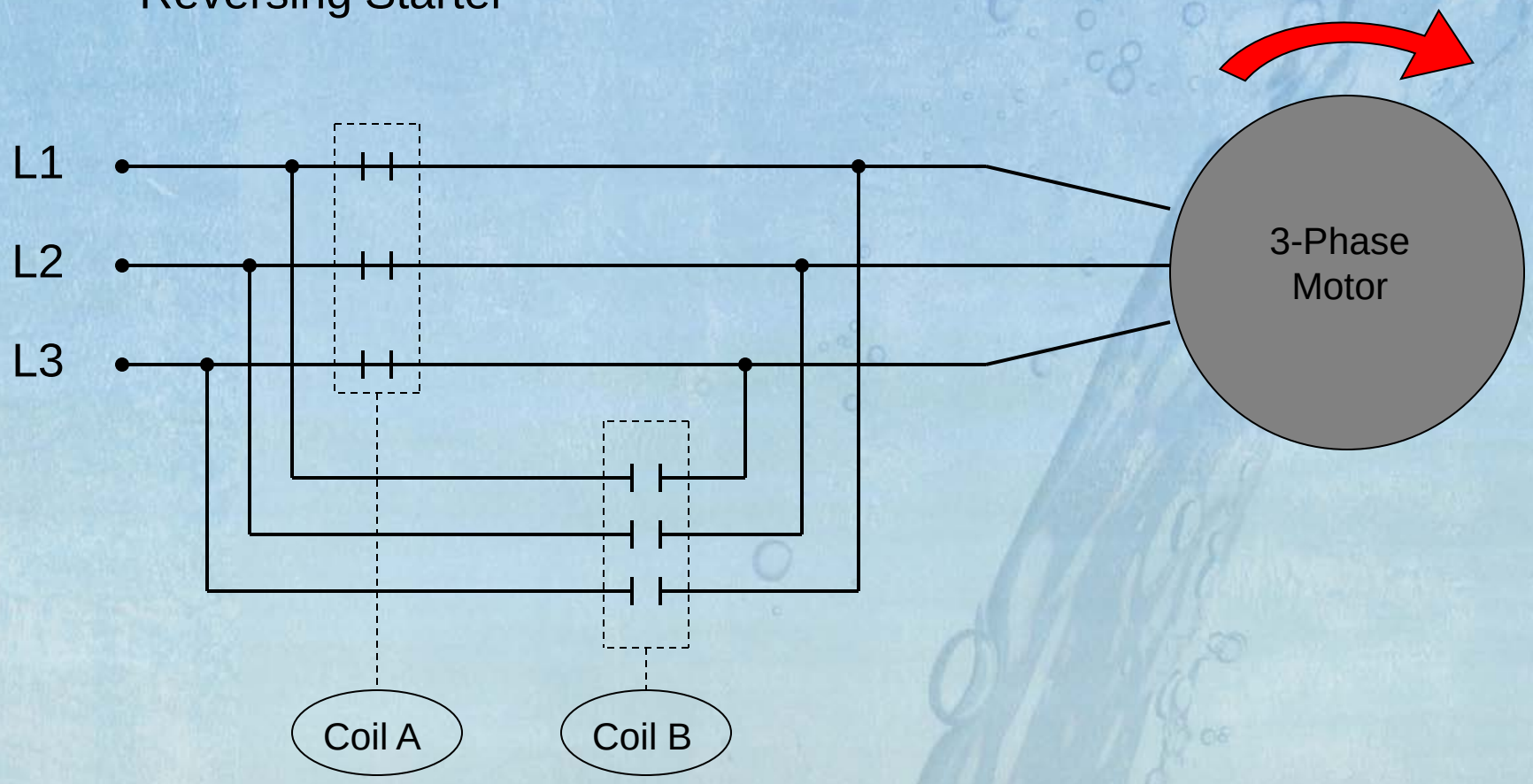

Mechanical & Electrical Interlocks

Specialty Controls Inc
PO Box 1630
Duvall, WA 98019
425-844-6412

Limit Switches

- Open and Closed Positions

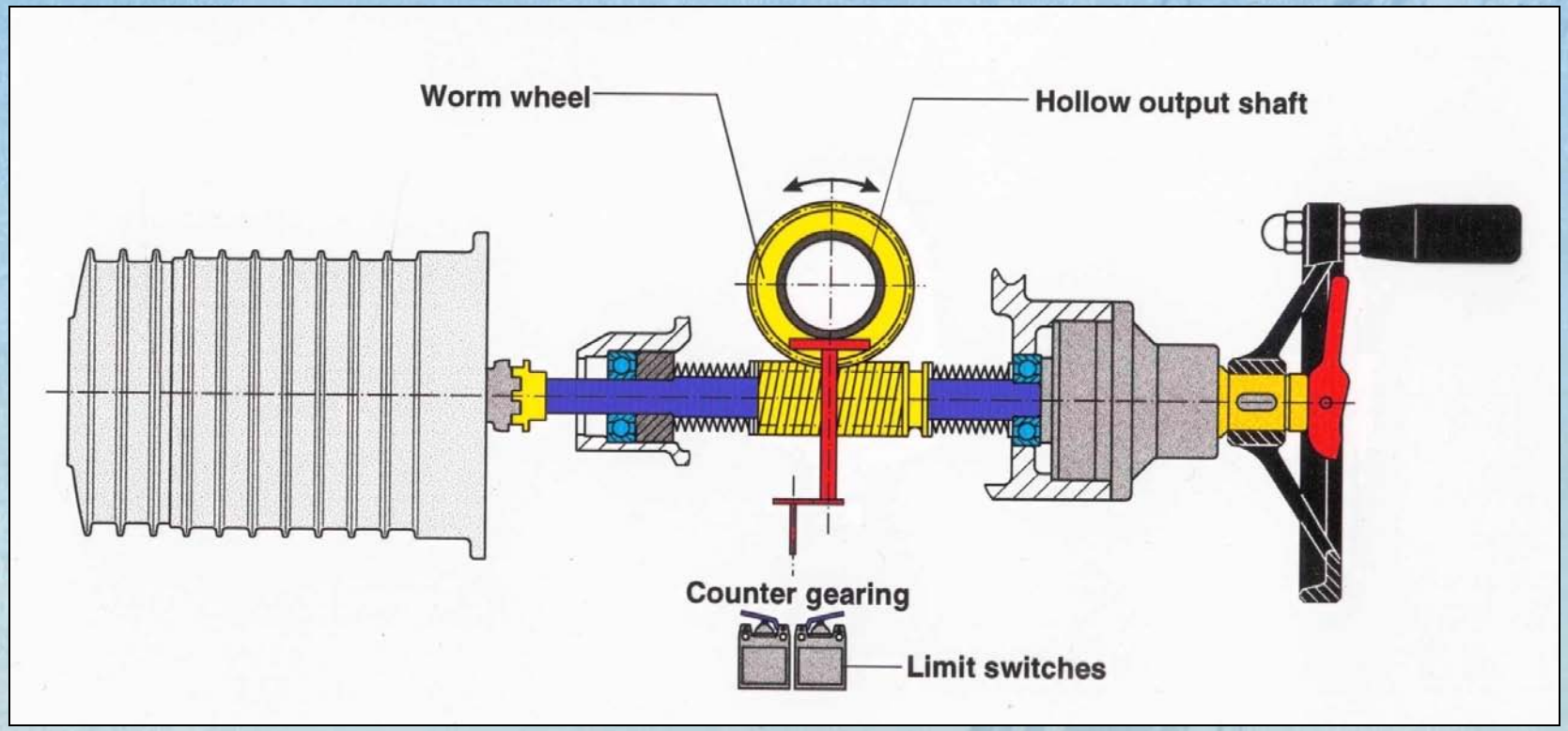

Specialty Controls Inc
PO Box 1630
Duvall, WA 98019
425-844-6412

Torque

Operating Torque Range
- Min / Max Setting

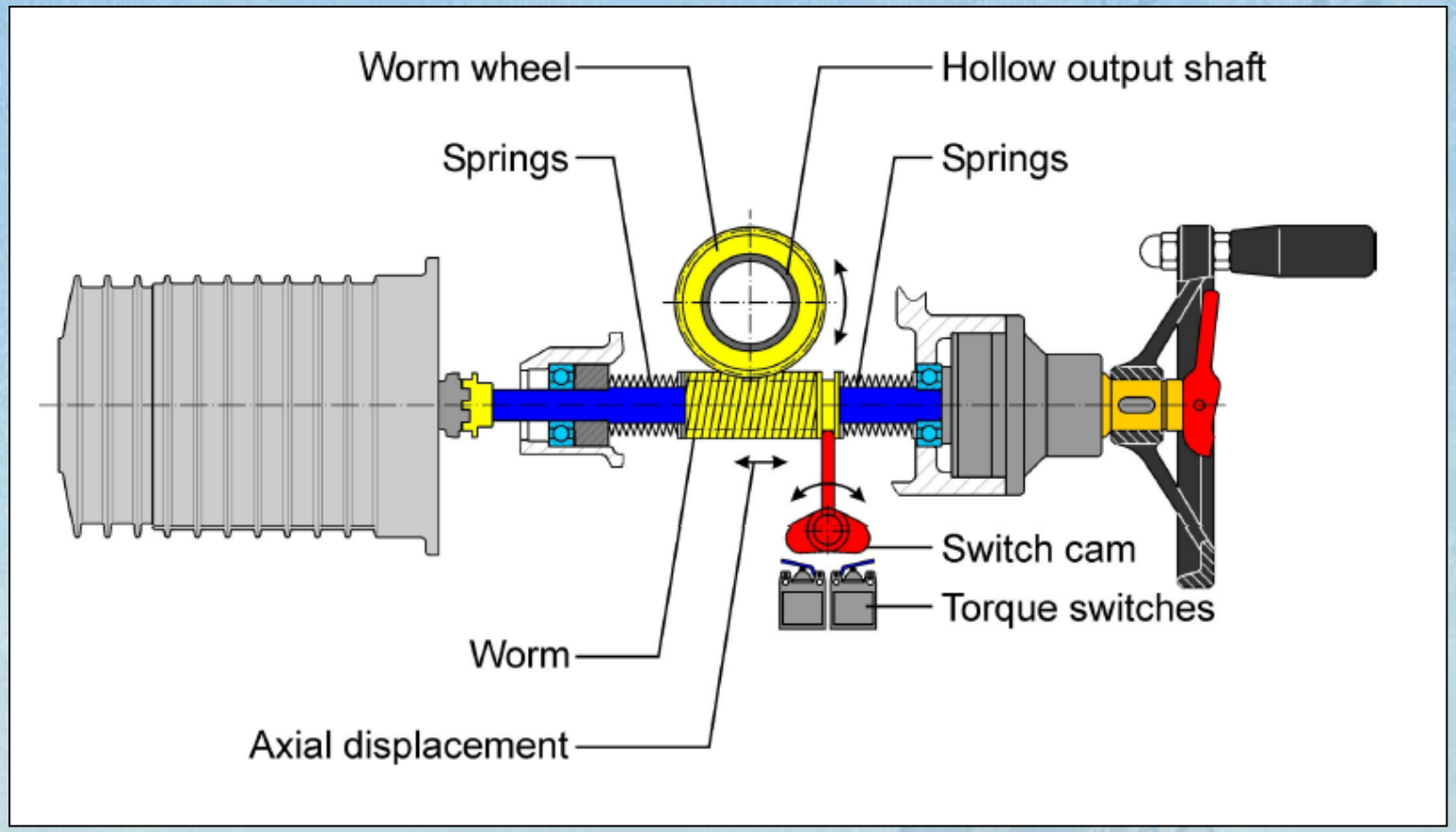

Specialty Controls Inc
PO Box 1630
Duvall, WA 98019
425-844-6412

Limit & Torque Switch Drive

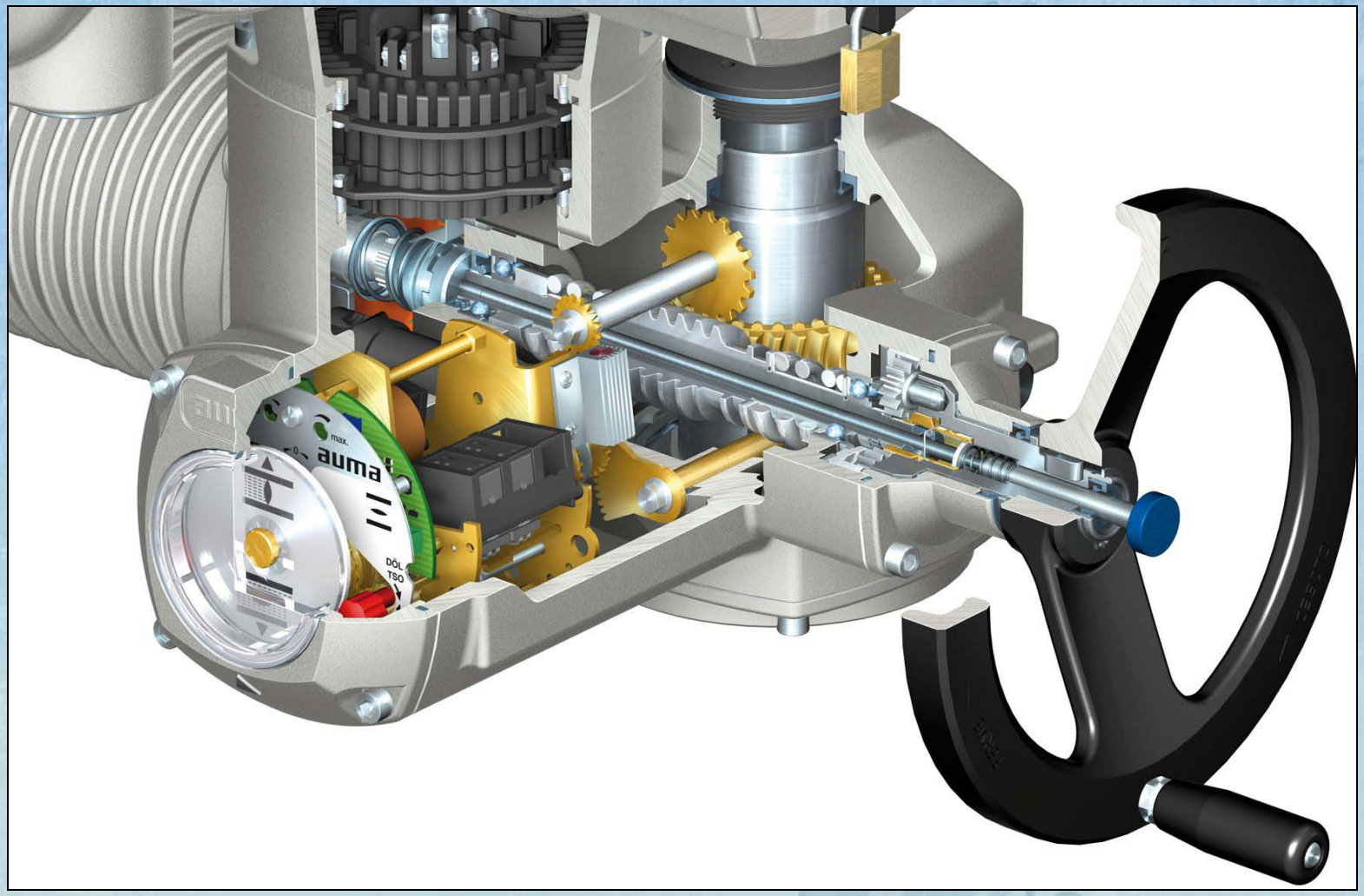

Specialty Controls Inc
PO Box 1630
Duvall, WA 98019
425-844-6412

Limit & Torque Mechanical Sensing

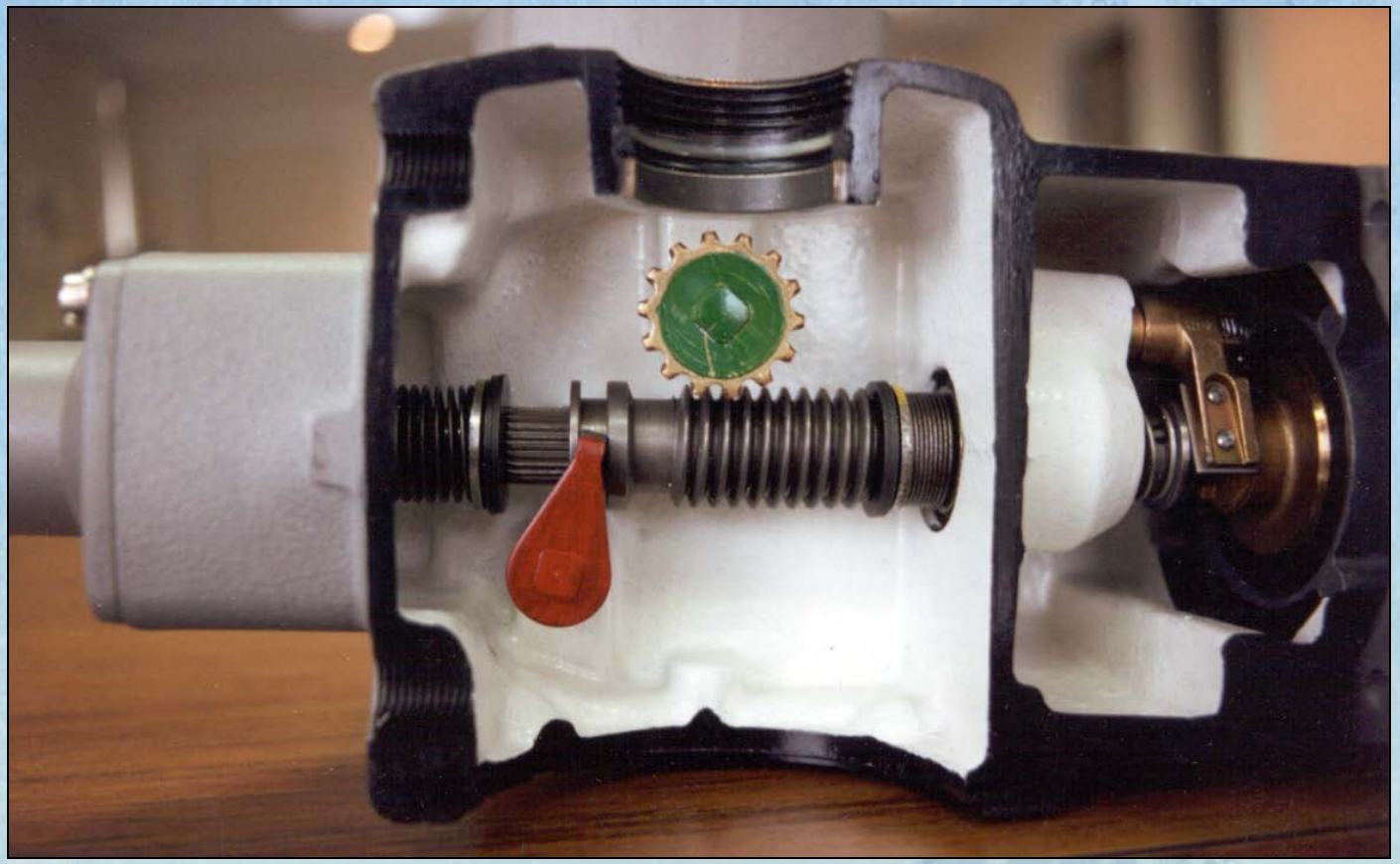

Specialty Controls Inc
PO Box 1630
Duvall, WA 98019
425-844-6412

Torque & Limit Adjustment

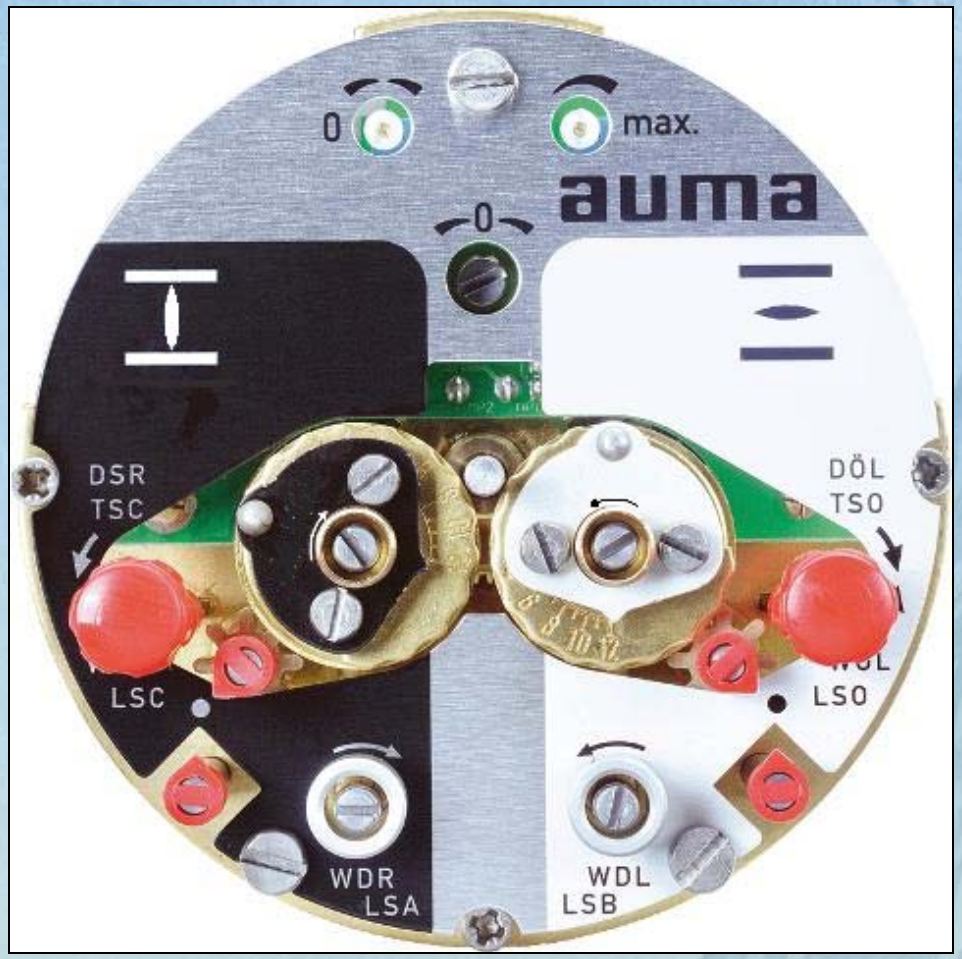

Specialty Controls Inc
PO Box 1630
Duvall, WA 98019
425-844-6412

Motor Protection

Pumps & Fans:

- Motors Ramp Up to Speed
- Continuous Operation

Electric Valve Actuators:

- Intermittent Duty, Torque Rated
- Full RPM Instantly (generate high output torque instantly)
- Thermal Protection (thermal switches - motor windings)
- Motor Current Overload Protection (amps)

Specialty Controls Inc
PO Box 1630
Duvall, WA 98019
425-844-6412

Electrical Power

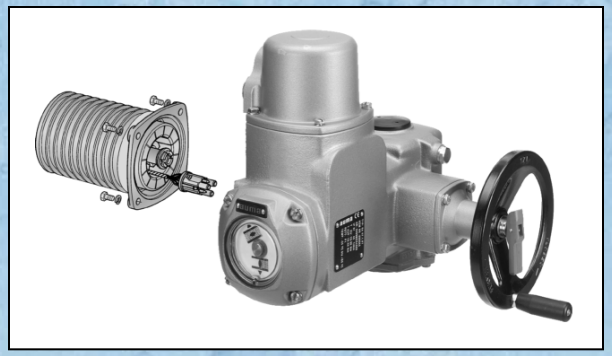

Supply Power
- Motor Voltage
- 3-Phase (208, 230, 240, 460, 480)
- 1-Phase (120, 208, 240)

Control Power:
- Used to Power the Motor Controls
- Low Current (< 1 amp)
- 24 VDC
- 24 VAC
- 120 VAC

Specialty Controls Inc
PO Box 1630
Duvall, WA 98019
425-844-6412

Power & Control Circuit

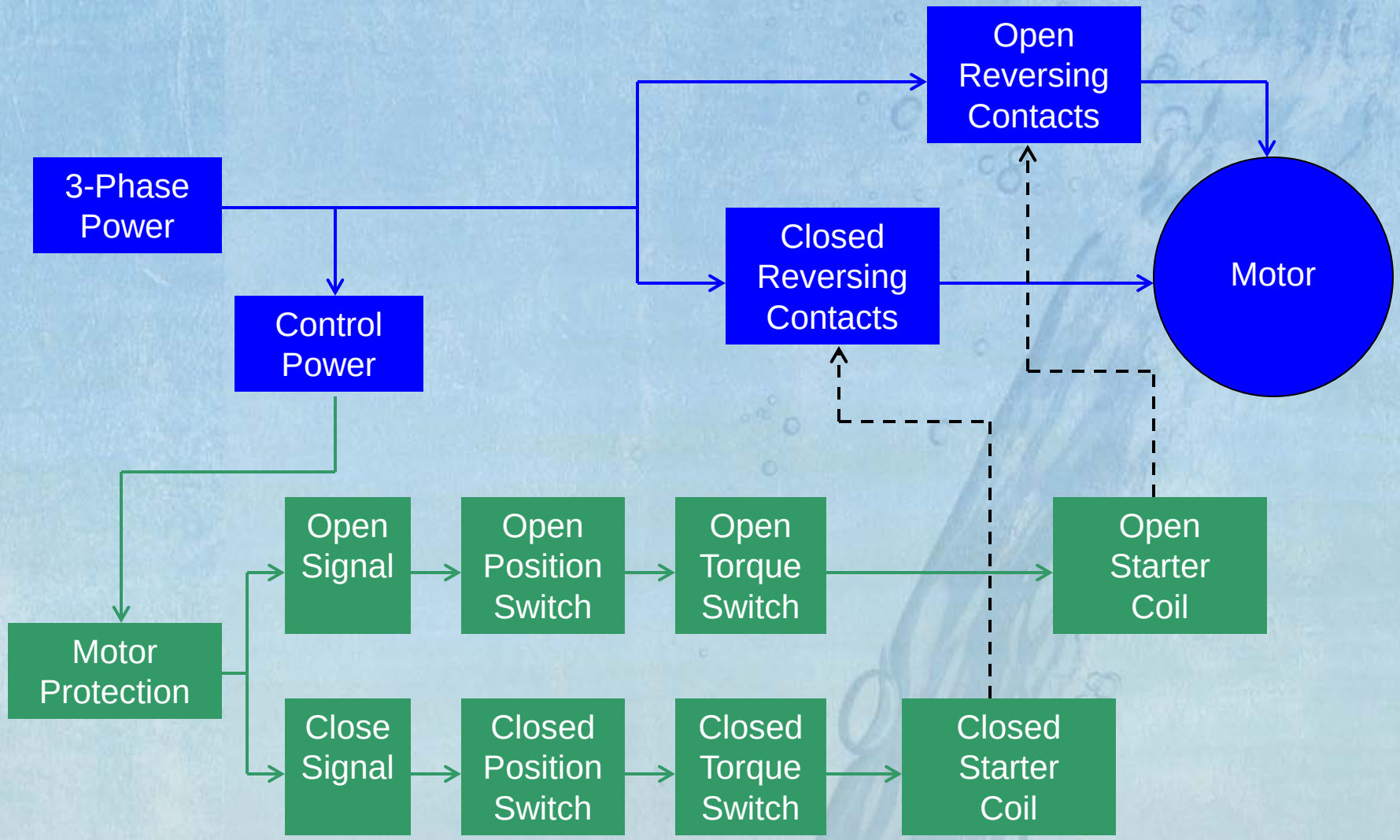

Specialty Controls Inc
PO Box 1630
Duvall, WA 98019
425-844-6412

External Motor Controls

Control Cabinet:
- Reversing Contacts
- Control Power
- Control Logic

Local Controls
- Selector Switch
- Pushbuttons
- Pilot Lights

Actuator
- Position Switches
- Torque Switches
- Thermal Protection

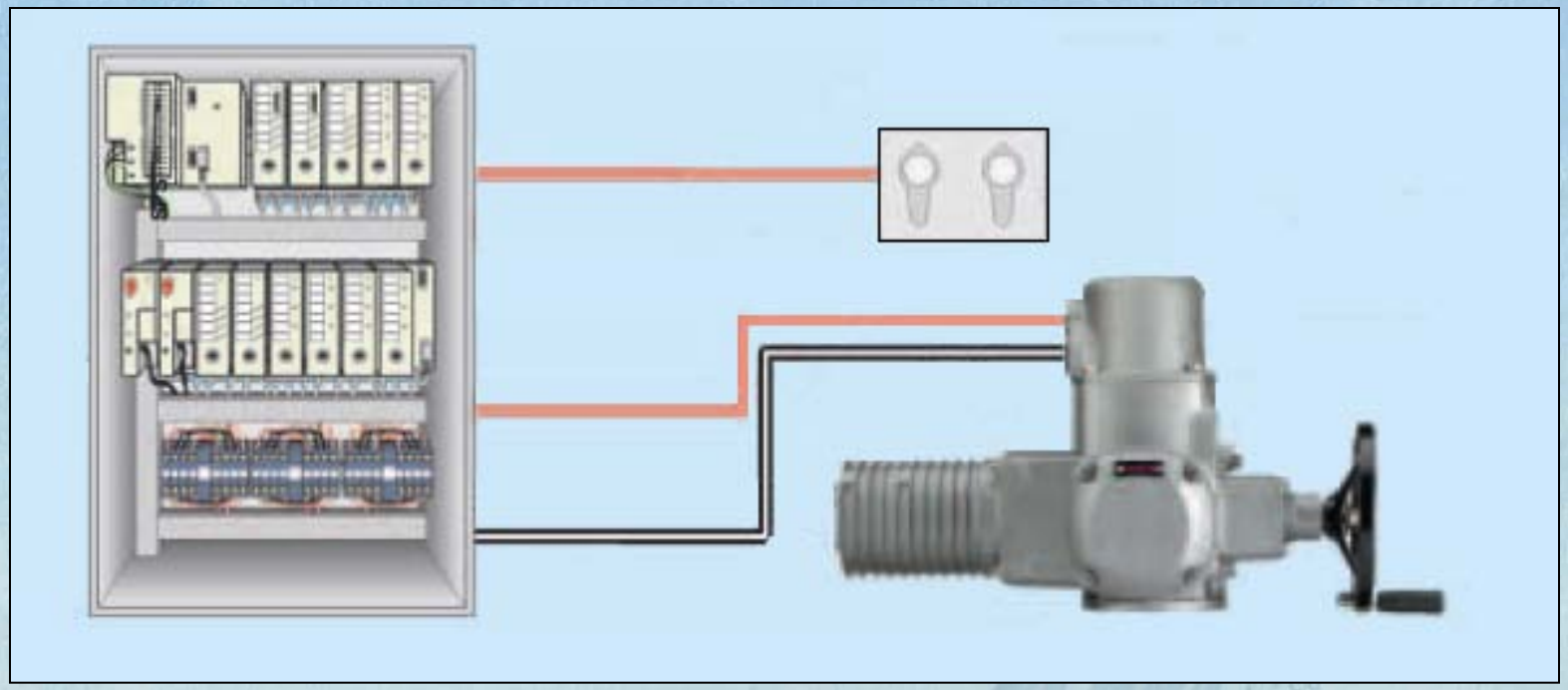

Specialty Controls Inc
PO Box 1630
Duvall, WA 98019
425-844-6412

Integral Controls

PLC:
- Command Signals

Actuator
- Position Switches
- Torque Switches
- Thermal Protection

- Reversing Contacts
- Control Power
- Control Logic

- Selector Switch
- Pushbuttons
- Pilot Lights

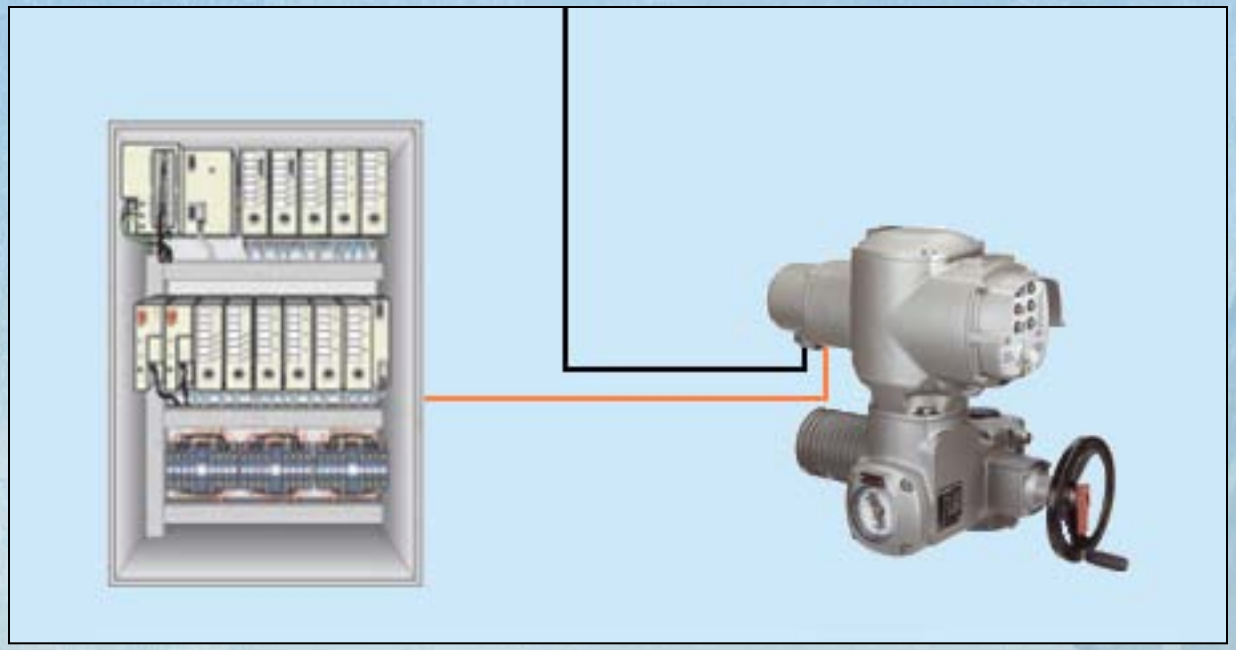

Specialty Controls Inc
PO Box 1630
Duvall, WA 98019
425-844-6412

Remote Mount Controls

- Inaccessible Locations
- Hazardous Locations
- Overhead Pipe Racks

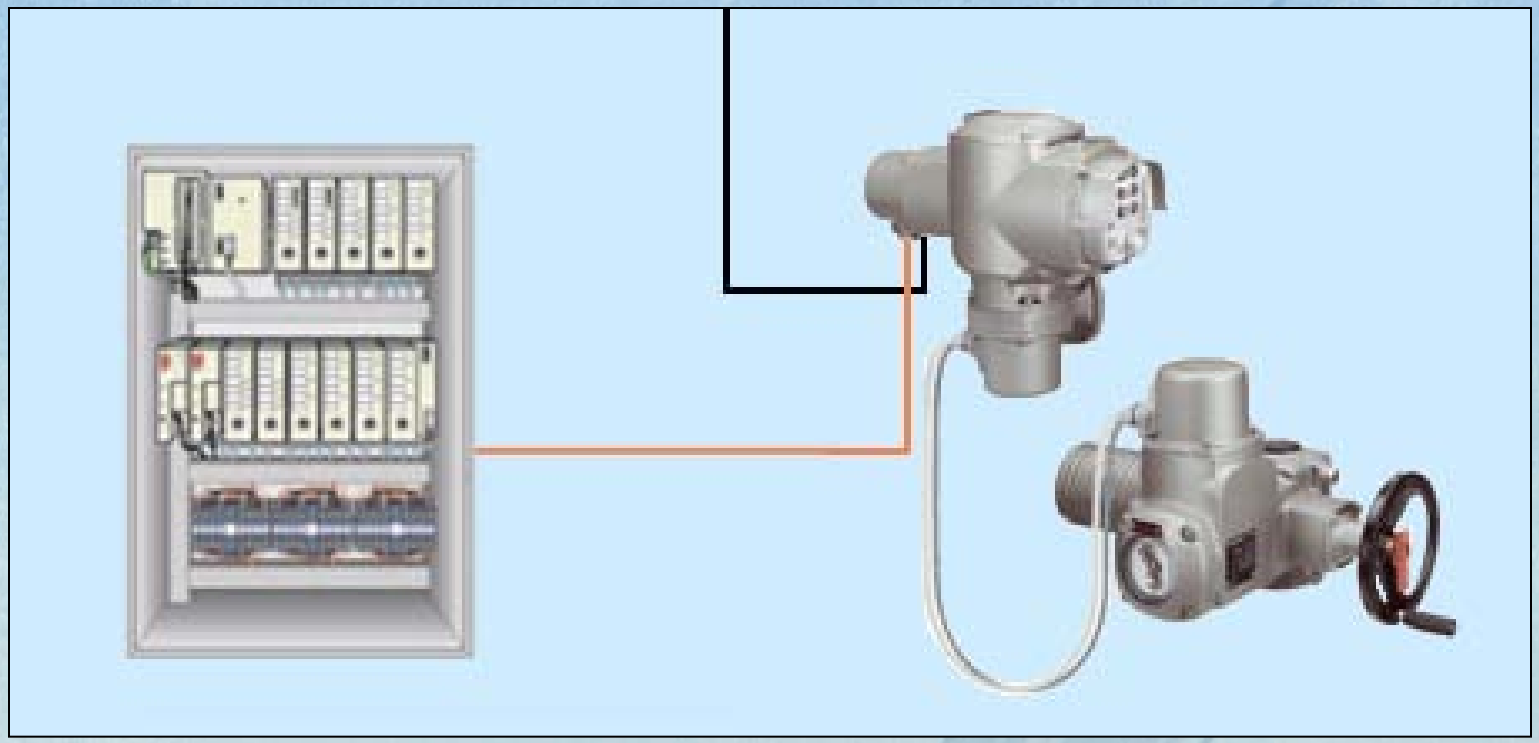

Specialty Controls Inc
PO Box 1630
Duvall, WA 98019
425-844-6412

Local Controls

Pushbuttons
- Open
- Stop
- Close

Selector Switch
- Local
- Off
- Remote

Pilot Lights (LED's)
- Open - Red
- Fault - Amber
- Close - Green

Specialty Controls Inc
PO Box 1630
Duvall, WA 98019
425-844-6412

Lock-Out / Tag-Out

Selector Switch Padlock
Lockable in all 3 positions: Local/Off/Remote

Lockable Cover for Local Controls

Declutch Lever Lock
Prevents Unauthorized Manual Operation

Specialty Controls Inc
PO Box 1630
Duvall, WA 98019
425-844-6412

Motor Control Designs

Conventional

Non-Intrusive

Conventional -vs.- Non-Intrusive

Specialty Controls Inc
PO Box 1630
Duvall, WA 98019
425-844-6412

Motor Control Designs

Conventional

Mechanical Switches
- Limits
- Torque

Simple Controls

Non-Intrusive

Micro-Processor Based

Absolute Encoder
- Limits
- Torque

Diagnostics
- Faults
- Re-Settable Counters

Specialty Controls Inc
PO Box 1630
Duvall, WA 98019
425-844-6412

Switch Adjustment

Conventional

Non-Intrusive

Switch Adjustment
- Limits
- Torque

"Screw Driver"

Switch Adjustment
- Limits
- Torque

"On Screen Adjustment"

Specialty Controls Inc
PO Box 1630
Duvall, WA 98019
425-844-6412

Programming

Conventional

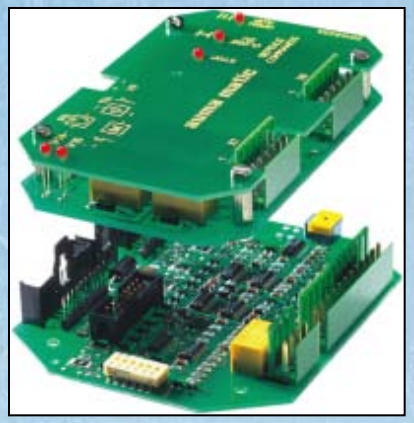

Non-Intrusive

Position
- Limit Seating
- Torque Seating

Local & Remote Control:
- Seal In
- Maintained

"On Screen Adjustment"

"Via Lap Top"

"Via Blue Tooth"

Specialty Controls Inc
PO Box 1630
Duvall, WA 98019
425-844-6412

Non-Intrusive

- PID Controller
- Non-Intrusive
- Pulse Timer
- Torque Switch By-Pass
- Operational Data Logging
- Electronic Name Plate
- Monitoring Functions
- Intermediate Positions
- Emergency Input
- Auxiliary Bus Inputs
- Isolated 0/4-20mA Position Feedback
- Programmable Output Relays
- Adaptive Positioner

Specialty Controls Inc
PO Box 1630
Duvall, WA 98019
425-844-6412

Applications - Suggestions

Conventional

Non-Intrusive

Isolation Service
- Open / Close
- 90% of the Applications
- Simple: Slow & Dumb

Modulating
- 4 - 20 mA Input
- Jogging

Position Feedback
- 4 - 20 mA Output

Extended Stroke Time
- Pulse Timer

Specialty Controls Inc
PO Box 1630
Duvall, WA 98019
425-844-6412

Field Retrofit

Before & After

Specialty Controls Inc
PO Box 1630
Duvall, WA 98019
425-844-6412

Typical Applications

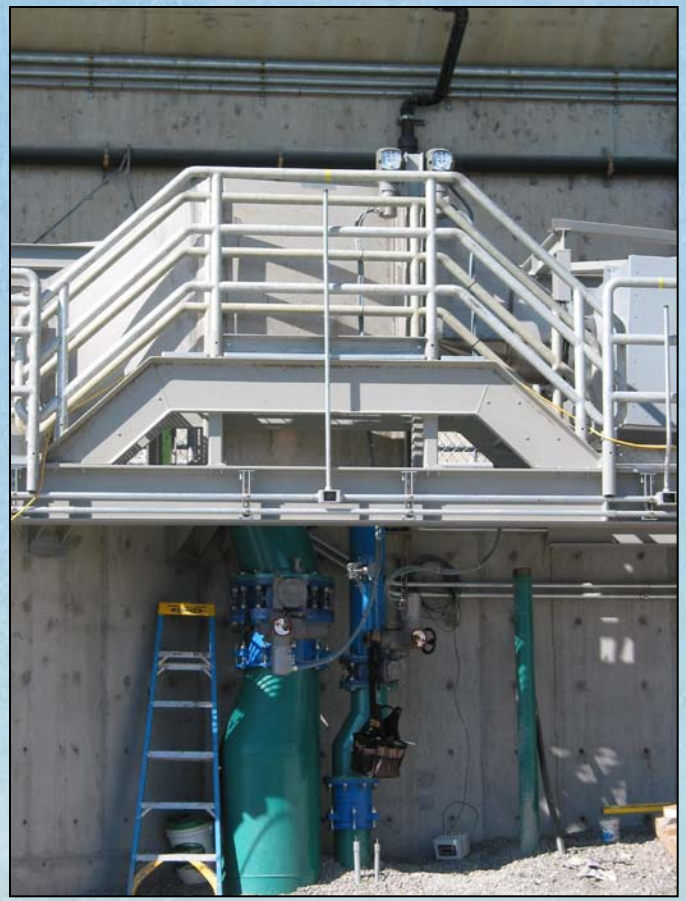

Specialty Controls Inc
PO Box 1630
Duvall, WA 98019
425-844-6412

Typical Applications

Specialty Controls Inc
PO Box 1630
Duvall, WA 98019
425-844-6412

Questions

Specialty Controls Inc
PO Box 1630
Duvall, WA 98019
425-844-6412

On Behalf of Auma

Thank You